Homework 2 Solutions. (2.1: 16, 24, 36 ; 2.2: 16, 24)

(16) The matrix $A = \begin{bmatrix} 3 & 0 \\ 0 & 3 \end{bmatrix}$ scales vectors by a factor of 3.

Here is the proof: $\|A\vec{x}\|^2 = \left\| \begin{bmatrix} 3x_1 \\ 3x_2 \end{bmatrix} \right\|^2 = (3x_1)^2 + (3x_2)^2$

$$= 9x_1^2 + 9x_2^2 = 9(x_1^2 + x_2^2) = 9\|\vec{x}\|^2.$$

So $\|A\vec{x}\| = 3\|\vec{x}\|$

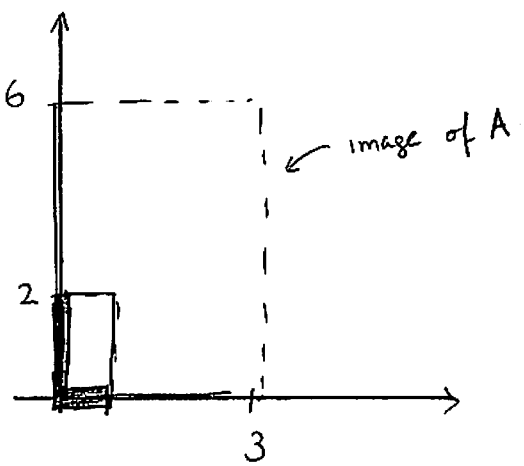

The matrix is invertible since $\det(A) = 9 \neq 0$.

$$A^{-1} = \begin{bmatrix} 1/3 & 0 \\ 0 & 1/3 \end{bmatrix}.$$

(24) $A = \begin{bmatrix} 0 & -1 \\ 1 & 0 \end{bmatrix}$ $\quad A\vec{e}_1 = \begin{bmatrix} 0 \\ 1 \end{bmatrix} = \vec{e}_2, \quad A\vec{e}_2 = \begin{bmatrix} -1 \\ 0 \end{bmatrix} = -\vec{e}_1$

A is a 90° rotation ↺

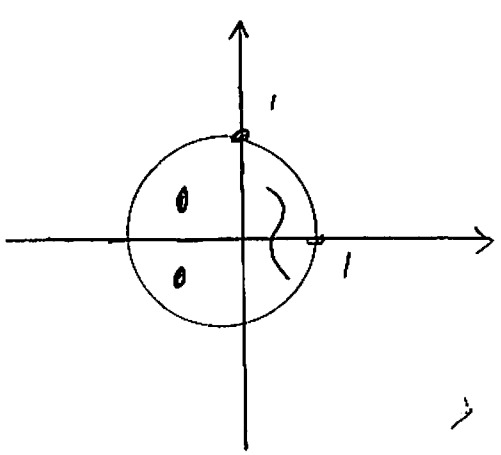

(36)

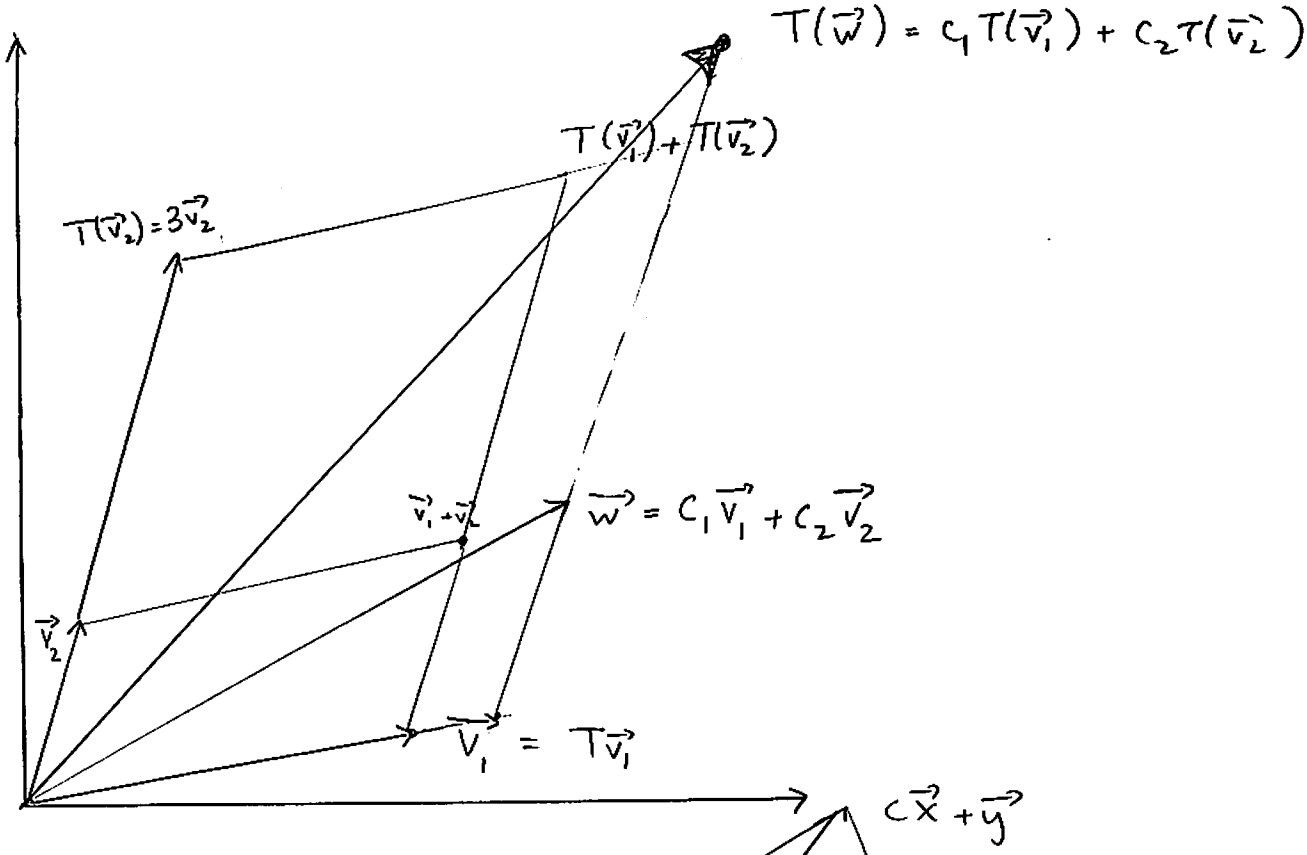

(16) (a)

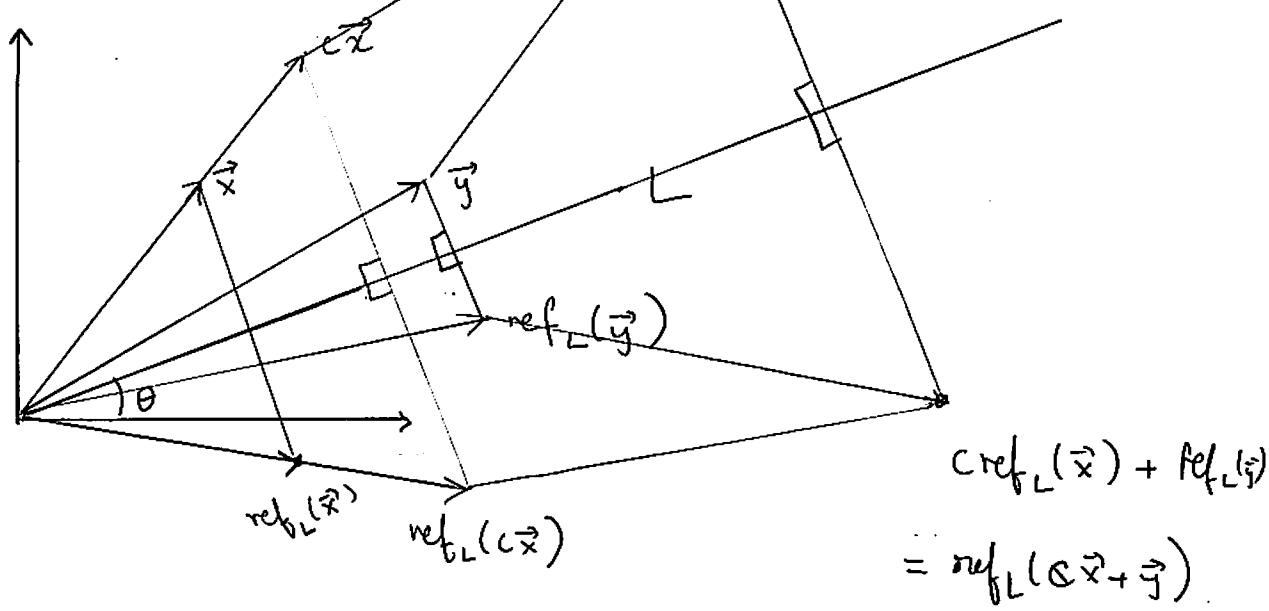

(b) We know that $\mathrm{ref}_L(\vec{x}) = 2(\vec{x} \cdot \vec{u})\vec{u} - \vec{x}$

$\vec{u} = \begin{bmatrix} \cos(\theta) \\ \sin(\theta) \end{bmatrix}$,

$$\text{refl} = 2\begin{bmatrix} u_1^2 & u_1u_2 \\ u_2u_1 & u_2^2 \end{bmatrix} - \begin{bmatrix} 1 & 0 \\ 0 & 1 \end{bmatrix} = \begin{bmatrix} 2u_1^2-1 & 2u_1u_2 \\ 2u_1u_2 & 2u_2^2-1 \end{bmatrix}$$

$$= \begin{bmatrix} 2\cos^2(\theta)-1 & 2\sin(\theta)\cos(\theta) \\ 2\sin(\theta)\cos(\theta) & 2\sin^2(\theta)-1 \end{bmatrix} = \begin{bmatrix} \cos(2\theta) & \sin(2\theta) \\ \sin(2\theta) & -\cos(2\theta) \end{bmatrix}.$$

[That is not a rotation!]

(24) (a) Suppose that $\|A\vec{x}\| = \|\vec{x}\|$ and consider $\vec{x} = \begin{bmatrix} x_1 \\ x_2 \end{bmatrix}$.

$$\|A\vec{x}\|^2 = \|x_1\vec{v} + x_2\vec{w}\|^2 = (x_1\vec{v} + x_2\vec{w}) \cdot (x_1\vec{v} + x_2\vec{w})$$

$$= x_1^2\, \vec{v}\cdot\vec{v} + x_2^2\, \vec{w}\cdot\vec{w} + 2x_1x_2\, \vec{v}\cdot\vec{w}$$

$$= x_1^2\, \|\vec{v}\|^2 + x_2^2\, \|\vec{w}\|^2 + 2x_1x_2\, \vec{v}\cdot\vec{w}$$

However this is equal to

$$= \|\vec{x}\|^2 = x_1^2 + x_2^2.$$

Now set $\vec{x} = \vec{e}_1$ to get, $\|\vec{v}\|^2 = \|\vec{e}_1\|^2 = 1$

set $\vec{x} = \vec{e}_2$ to get, $\|\vec{w}\|^2 = \|\vec{e}_2\|^2 = 1$

set $\vec{x} = \vec{e}_1 + \vec{e}_2$ to get,

$$\underbrace{\|\vec{v}\|^2 + \|\vec{w}\|^2}_{2} + 2\,\vec{v}\cdot\vec{w} = 2.$$

Hence, $\vec{v}\cdot\vec{w} = 0$.

Note that we never used the fact that T preserves angles!

(b) $\vec{v} = \begin{bmatrix} a \\ b \end{bmatrix}$ with $a^2 + b^2 = 1$.

$\vec{w} = \begin{bmatrix} x \\ y \end{bmatrix}$. Since $\vec{w} \cdot \vec{v} = 0$ we get

$$ax + by = 0$$

also

$$x^2 + y^2 = 1.$$

This set of equations has the solutions

$x = b$, $y = -a$ and $x = -b$, $y = a$. (check this!)

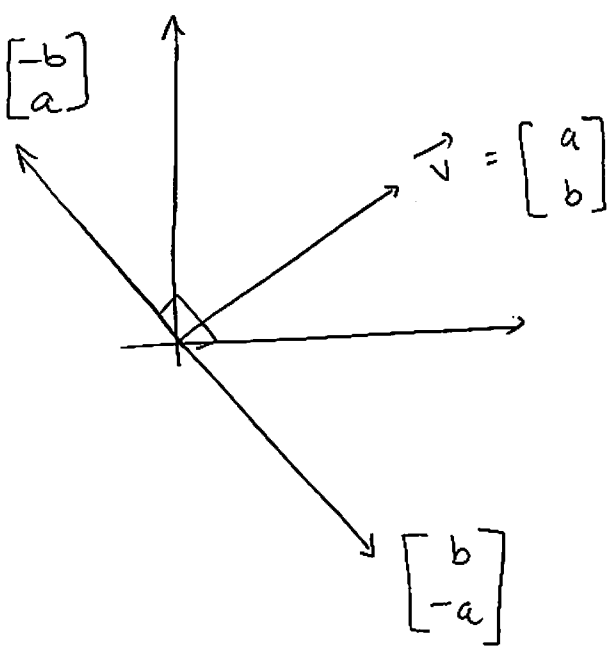

(c) From the above $T = \begin{bmatrix} a & -b \\ b & a \end{bmatrix}$ or $\begin{bmatrix} a & b \\ b & -a \end{bmatrix}$

the first is a rotation, the second a reflection.