Numer. Math. 30, 241–266 (1978)

Numerische Mathematik

On the Zeros and Poles of Padé Approximants to e^z. III

E. B. Saff*

Department of Mathematics, University of South Florida, Tampa, FL 33620, USA

R. S. Varga**

Department of Mathematics, Kent State University, Kent, OH 44242, USA

Summary. In this paper, we continue our study of the location of the zeros and poles of general Padé approximants to e^z. We state and prove here new results for the asymptotic location of the normalized zeros and poles for sequences of Padé approximants to e^z, and for the asymptotic location of the normalized zeros for the associated Padé remainders to e^z. In so doing, we obtain new results for nontrivial zeros of Whittaker functions, and also generalize earlier results of Szegö and Olver.

Subject Classifications. AMS(MOS): 41A20; CR: 5.13.

1. Introduction

The purpose of this paper is to state and prove new results on the location of limit points for the zeros and poles for sequences of normalized Padé approximants to e^z, as announced in [12], and for the zeros of the associated normalized Padé remainders to e^z. We also present a new result on the angular distribution of these limit points of zeros and poles.

What has strongly motivated this work is an incisive article by Szegö [14], which considers the zeros of the partial sums $s_n(z) := \sum_{k=0}^{n} z^k/k!$ of the Maclaurin expansion for e^z. Szegö [14] showed that $\hat{z}$ is a limit point of zeros of the sequence of normalized partial sums $\{s_n(nz)\}_{n=1}^{\infty}$ iff

$$|\hat{z}e^{1-\hat{z}}|=1 \quad \text{and} \quad |\hat{z}|\leqq 1. \tag{1.1}$$

(This result was obtained later independently by Dieudonné [2].) Moreover, Szegö [14] showed that $\hat{z}$ is a nontrivial (i.e., nonzero) limit point of zeros of the normalized remainders $\{e^{nz}-s_n(nz)\}_{n=1}^{\infty}$ iff

$$|\hat{z}e^{1-\hat{z}}|=1 \quad \text{and} \quad |\hat{z}|\geqq 1. \tag{1.2}$$

* Research supported in part by the Air Force Office of Scientific Research under Grant AFOSR-74-2688

** Research supported in part by the Air Force Office of Scientific Research under Grant AFOSR-74-2729, and by the Energy Research and Development Administration (ERDA) under Grant EY-76-S-02-2075

0029-599X/78/0030/0241/$05.20

The connection of Szegö's result with Padé approximations to e^z is evident in that $s_n(z)$ is the $(n,0)$-th Padé approximant to e^z. Our new results, giving sharp generalizations of Szegö's results to the asymptotic distribution of zeros and poles of more general sequences of Padé approximants to e^z, will be stated explicitly in § 2, with their proofs being given in §§ 3–6. For the remainder of this section, we introduce necessary notation and cite needed known results.

As in [9], for any nonnegative integers n and ν, let $R_{n,\nu}(z)$ denote the Padé rational approximant of type (n,ν) to e^z, and write

$$R_{n,\nu}(z)=P_{n,\nu}(z)/Q_{n,\nu}(z),$$

where the degrees of $P_{n,\nu}(z)$ and $Q_{n,\nu}(z)$ are respectively n and ν, and where $Q_{n,\nu}(0)=1$. It is explicitly known (cf. Perron [8, p. 433]) that

$$P_{n,\nu}(z)=\sum_{k=0}^{n}\frac{(n+\nu-k)!\,n!\,z^k}{(n+\nu)!\,k!\,(n-k)!};$$

$$Q_{n,\nu}(z)=\sum_{k=0}^{\nu}\frac{(n+\nu-k)!\,\nu!\,(-z)^k}{(n+\nu)!\,k!\,(\nu-k)!}, \tag{1.3}$$

so that

$$Q_{n,\nu}(z)=P_{\nu,n}(-z). \tag{1.4}$$

Because of this identity (1.4), results on the zeros of Padé approximants easily translate into results on the poles of Padé approximants. In addition, it is known (cf. Perron [8, p. 436]) that the Padé remainder $e^z-R_{n,\nu}(z)$ has the representation

$$\begin{aligned}Q_{n,\nu}(z)\{e^z-R_{n,\nu}(z)\}&=e^zQ_{n,\nu}(z)-P_{n,\nu}(z)\\&=\frac{(-1)^\nu z^{n+\nu+1}}{(n+\nu)!}\int_0^1 e^{tz}(1-t)^n t^\nu\,dt.\end{aligned} \tag{1.5}$$

Essential for the statements and proofs of our main results are the following recent results on zeros of Padé approximants to e^z.

Theorem 1.1. (Saff and Varga [9–11]). For every $\nu\geqq 0$, $n\geqq 2$, the Padé approximant $R_{n,\nu}(z)$ to e^z has all its zeros in the infinite sector

$$S_{n,\nu}:=\left\{z:\ |\arg z|>\cos^{-1}\left(\frac{n-\nu-2}{n+\nu}\right)\right\}.$$

Furthermore, on defining generically the infinite sector S_λ, $\lambda\geqq 0$, by

$$S_\lambda:=\left\{z:\ |\arg z|>\cos^{-1}\left(\frac{1-\lambda}{1+\lambda}\right)\right\}, \tag{1.6}$$

consider any sequence of Padé approximants $\{R_{n_j,\nu_j}(z)\}_{j=1}^{\infty}$ satisfying

$$\lim_{j\to\infty} n_j=+\infty,\quad\text{and}\quad \lim_{j\to\infty}\frac{\nu_j}{n_j}=\sigma, \tag{1.7}$$

for any σ with $0 \leqq \sigma < \infty$. Then, for any ε with $0 < \varepsilon < \sigma$, $\{R_{n_j, \nu_j}(z)\}_{j=1}^{\infty}$ has infinitely many zeros in $S_{\sigma-\varepsilon}$, and only finitely many zeros in the complement of $S_{\sigma-\varepsilon}$, and S_σ is the smallest sector of the form $|\arg z| > \tau$, $\tau > 0$, with this property.

Theorem 1.2. (Saff and Varga [12]). For any $n \geqq 1$ and any $\nu \geqq 0$, all the zeros of the Padé approximant $R_{n,\nu}(z)$ lie in the annulus

$$(n+\nu)\mu < |z| < n+\nu+4/3 \qquad (\mu \doteqdot 0.278465), \tag{1.8}$$

where μ is the unique positive root of $\mu e^{1+\mu} = 1$. Moreover, the constant μ in (1.8) is best possible in the sense that

$$\mu = \inf_{n \geqq 1,\, \nu \geqq 0} \{|z|/(n+\nu) \colon R_{n,\nu}(z) = 0\}.$$

We remark that because of the identity in (1.4), the inequality (1.8) also applies to the poles of any Padé approximant $R_{n,\nu}(z)$ with $n \geqq 0$ and $\nu \geqq 1$.

Theorem 1.3. (Saff and Varga [10]). For any σ with $0 < \sigma < \infty$, consider any sequence of Padé approximants $\{R_{n_j, \nu_j}(z)\}_{j=1}^{\infty}$ for e^z for which (1.7) is satisfied. Then, $R_{n_j, \nu_j}(z)$ has zeros of the form

$$(n_j+\nu_j+1)\exp\left\{\pm i \cos^{-1}\left(\frac{n_j-\nu_j}{n_j+\nu_j+1}\right)\right\} + O((n_j+\nu_j+1)^{1/3}), \qquad \text{as } j \to \infty. \tag{1.9}$$

2. Statements of New Results

We list and discuss our new results in this section. To begin, for any nonnegative integers n and ν, we have from (1.5) that the Padé remainder to e^z, $e^z - R_{n,\nu}(z)$, has a trivial zero at $z = 0$. As our first result, which is necessary for the proof of one of our main results, we state

Proposition 2.1. For any nonnegative n and ν with $n+\nu > 0$, let z be any nontrivial zero of the Padé remainder, $e^z - R_{n,\nu}(z)$, to e^z. Then,

$$|z| > \{(n+\nu)(n+\nu+2)\}^{1/2}. \tag{2.1}$$

The proof of Proposition 2.1 will be given in Section 3. We remark that the Padé remainder $e^z - R_{n,\nu}(z)$ is known to have infinitely many zeros for any $n \geqq 1$ and any $\nu \geqq 0$, and such remainders have been studied in the literature (cf. Szegö [14] and Wynn [18]).

To describe our first main result, for any σ with $0 < \sigma < \infty$, define the numbers

$$z_\sigma^{\pm} := \{(1-\sigma) \pm 2\sqrt{\sigma}\, i\}/(1+\sigma) = \exp\left\{\pm i \cos^{-1}\left(\frac{1-\sigma}{1+\sigma}\right)\right\} \tag{2.2}$$

which have modulus unity, and consider the complex plane $\mathbb{C}$ slit along the two rays

$$\mathscr{R}_\sigma := \{z \colon z = z_\sigma^+ + i\tau \text{ or } z = z_\sigma^- - i\tau,\ \forall\, \tau \geqq 0\}, \tag{2.3}$$

as shown in Figure 1. Now, the function

$$g_\sigma(z) := \sqrt{1+z^2-2z\left(\frac{1-\sigma}{1+\sigma}\right)} \tag{2.4}$$

has z_σ^+ and z_σ^- as branch points, which are the finite extremities of $\mathscr{R}_\sigma$. On taking the principal branch for the square root, i.e., on setting $g_\sigma(0)=1$ and extending g_σ analytically on this double slit domain $\mathbb{C}\backslash\mathscr{R}_\sigma$, then g_σ is analytic and single-valued on $\mathbb{C}\backslash\mathscr{R}_\sigma$. Next, it can be verified that $1\pm z+g_\sigma(z)$ does not vanish on $\mathbb{C}\backslash\mathscr{R}_\sigma$.

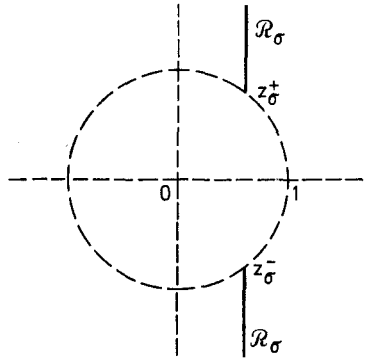

Fig. 1

Thus, we define, respectively, $(1+z+g_\sigma(z))^{\frac{2}{1+\sigma}}$ and $(1-z+g_\sigma(z))^{\frac{2\sigma}{1+\sigma}}$ by requiring that their values at $z=0$ be the positive real numbers $2^{\frac{2}{1+\sigma}}$ and $2^{\frac{2\sigma}{1+\sigma}}$, and by analytic continuation. These functions are also analytic and single-valued in $\mathbb{C}\backslash\mathscr{R}_\sigma$. With these conventions, we set

$$w_\sigma(z) := \frac{4\sigma^{\left(\frac{\sigma}{1+\sigma}\right)} z e^{g_\sigma(z)}}{(1+\sigma)(1+z+g_\sigma(z))^{\frac{2}{1+\sigma}}(1-z+g_\sigma(z))^{\frac{2\sigma}{1+\sigma}}}, \qquad 0<\sigma<\infty, \tag{2.5}$$

and it follows that w_σ is analytic and single-valued on $\mathbb{C}\backslash\mathscr{R}_\sigma$. Next, on letting $\sigma\to 0$ in (2.5), we verify that $w_0(z) := \lim_{\sigma\to 0} w_\sigma(z)$ satisfies

$$\begin{aligned} &w_0(z)=ze^{1-z} \quad \text{for } \operatorname{Re} z<1, \text{ and} \\ &w_0(z)=(ze^{1-z})^{-1} \quad \text{for } \operatorname{Re} z>1. \end{aligned} \tag{2.5'}$$

With these definitions, we come to our first main result, which is a strengthened form of a result announced in [12]. Its proof is given in § 4.

Theorem 2.2. For any σ with $0\leqq\sigma<\infty$, consider any sequence of Padé approximants $\{R_{n_j,\nu_j}(z)\}_{j=1}^\infty$ to e^z for which

$$\lim_{j\to\infty} n_j = +\infty, \quad \text{and} \quad \lim_{j\to\infty}(\nu_j/n_j)=\sigma, \tag{2.6}$$

and let $\bar{S}_\sigma$ denote the closure of S_σ (cf. (1.6)). Then,

i) $\hat{z}$ is a limit point of zeros of the normalized Padé approximants

$$\{R_{n_j,\nu_j}((n_j+\nu_j)z)\}_{j=1}^{\infty}$$

iff

$$\hat{z}\in D_\sigma := \{z\in\bar{S}_\sigma:\ |w_\sigma(z)|=1 \text{ and } |z|\leqq 1\}; \tag{2.7}$$

ii) if $\sigma>0$, then $\hat{z}$ is a limit point of poles of the normalized Padé approximants $\{R_{n_j,\nu_j}((n_j+\nu_j)z)\}_{j=1}^{\infty}$ iff

$$\hat{z}\in E_\sigma := \{z\in\overline{\mathbb{C}\setminus S_\sigma}:\ |w_\sigma(z)|=1 \text{ and } |z|\leqq 1\}; \tag{2.8}$$

iii) $\hat{z}$ is a limit point of nontrivial zeros of the normalized Padé remainders $\{e^{(n_j+\nu_j)z}-R_{n_j,\nu_j}((n_j+\nu_j)z)\}_{j=1}^{\infty}$ iff

$$\hat{z}\in F_\sigma := \{z:\ |w_\sigma(z)|=1 \text{ and } |z|\geqq 1\}. \tag{2.9}$$

We first remark that because $\overline{w_\sigma(z)}=w_\sigma(\bar{z})$ from (2.5), then $|w_\sigma(z)|=1$ iff $|w_\sigma(\bar{z})|=1$ for any $\sigma\geqq 0$. Thus, since the sector S_σ (cf. (1.6)) is itself symmetric about the real axis, it follows that the curves D_σ, E_σ, and F_σ of (2.7)–(2.9) are all symmetric about the real axis (cf. Fig. 2).

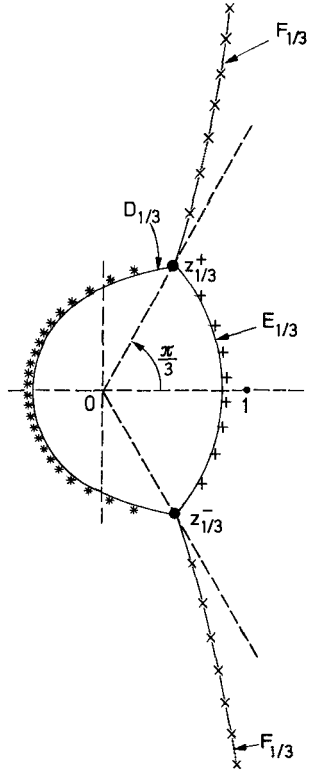

Fig. 2. Zeros of $R_{24,8}(32z)$ and $e^{32z}-R_{24,8}(32z)$, and poles of $R_{24,8}(32z)$.
$*$ = zeros of $R_{24,8}(32z)$; $+$ = poles of $R_{24,8}(32z)$; $\times$ = zeros of $e^{32z}-R_{24,8}(32z)$

We next remark that in the special case of Theorem 2.2 with $\sigma=0$ and, in addition, with $\nu_j=0$ and $n_j=j$ for all $j\geqq 1$, parts i) and iii) of Theorem 2.2 reduce respectively to Szegö's result (1.1) and (1.2), since the normalized sequence of approximants in this case, $\{R_{j,0}(jz)\}_{j=1}^{\infty}$, is just $\{s_n(nz)\}_{n=1}^{\infty}$. Furthermore, for the choice $\nu_j=j=n_j$ for all $j\geqq 1$, (2.6) is satisfied with $\sigma=1$, and in this case, the curves D_1 and E_1, after rotations of $\pi/2$, form the boundaries of the *eye-shaped* domain considered by Olver [6, p. 336] in his asymptotic expansions of Bessel functions.

To illustrate the result of Theorem 2.2, consider the sequence of Padé approximants $\{R_{3m,m}(4mz)\}_{m=1}^{\infty}$ for which $\sigma=1/3$ from (2.6). In Figure 2, we have graphed $D_{1/3}$, $E_{1/3}$, and portions of the two branches of $F_{1/3}$, along with the 24 zeros and 8 poles of the normalized Padé approximant $R_{24,8}(32z)$, denoted respectively by $*$'s and $+$'s. In Figure 2, we have also plotted zeros of the normalized Padé remainder $e^{32z}-R_{24,8}(32z)$, which are denoted by $\times$'s. Figure 2 shows that Theorem 2.2 quite accurately predicts the zeros and poles of $R_{n,\nu}((n+\nu)z)$, as well as the zeros of the remainder $e^{(n+\nu)z}-R_{n,\nu}((n+\nu)z)$, even for relatively small values of n and ν. The reader is advised to consult [12] for further graphical illustrations of parts i) and ii) of Theorem 2.2 in the cases $\sigma=0$, $\sigma=1$, and $\sigma=1/3$.

The next result is again motivated by another result of Szegö [14]. Its proof is given in Section 5.

Theorem 2.3. For any σ with $0\leqq\sigma<\infty$, consider any sequence of Padé approximants $\{R_{n_j,\nu_j}(z)\}_{j=1}^{\infty}$ to e^z for which (2.6) is satisfied.

i) If d_σ is a closed arc of the curve $D_\sigma\backslash\{z_\sigma^{\pm}\}$ (cf. (2.7)) with endpoints μ_1 and μ_2 (with $\arg\mu_2\geqq\arg\mu_1$), where $w_\sigma(\mu_j):=\exp(i\phi_j)$, $j=1,2$, let $\tau_{n_j}^{(1)}(d_\sigma)$ denote the number of zeros $z_j^{(1)}$ of $R_{n_j,\nu_j}(z)$ which satisfy $\arg\mu_2\geqq\arg z_j^{(1)}\geqq\arg\mu_1$. Then,

$$\lim_{j\to\infty}\tau_{n_j}^{(1)}(d_\sigma)/n_j=\frac{(1+\sigma)(\phi_2-\phi_1)}{2\pi}. \tag{2.10}$$

ii) If $\sigma>0$, and if e_σ is a closed arc of the curve $E_\sigma\backslash\{z_\sigma^{\pm}\}$ (cf. (2.8)) with endpoints μ_1 and μ_2 where $w_\sigma(\mu_j)=\exp(i\phi_j)$, $j=1,2$, let $\tau_{n_j}^{(2)}(e_\sigma)$ denote the number of poles $z_j^{(2)}$ of $R_{n_j,\nu_j}(z)$ which satisfy $\arg\mu_2\geqq\arg z_j^{(2)}\geqq\arg\mu_1$. Then,

$$\lim_{j\to\infty}\tau_{n_j}^{(2)}(e_\sigma)/\nu_j=\frac{(1+\sigma)(\phi_2-\phi_1)}{2\pi\sigma}. \tag{2.11}$$

iii) Let f_σ be a Jordan curve which contains in its interior a single closed subarc of one of the branches of F_σ but no points of D_σ or E_σ, let $\phi_2-\phi_1$ denote the change in the argument of $w_\sigma(z)$ as this subarc of F_σ is traversed in the positive sense, and let $\tau_{n_j}^{(3)}(f_\sigma)$ denote the number of zeros $z_\sigma^{(3)}$ in f_σ of the normalized difference $e^{(n_j+\nu_j)z}-R_{n_j,\nu_j}((n_j+\nu_j)z)$. Then,

$$\lim_{j\to\infty}\frac{\tau_{n_j}^{(3)}(f_\sigma)}{(n_j+\nu_j)}=\frac{\phi_2-\phi_1}{2\pi}. \tag{2.12}$$

Again, the special case of Theorem 2.3 with $\sigma=0$ and, in addition, with $\nu_j=0$ and $n_j=j$ for all $j\geqq 1$, is due to Szegö [14]. Because $w_0(z)=ze^{1-z}$ for $\operatorname{Re} z<1$ from (2.5′), and because $w_0\left(\frac{\pm i}{e}\right)=\pm ie^{\mp i/e}$, it follows from (2.10) that if $\tilde{\tau}_n$ is the number

Table 1. l_{3m} = number of zeros of $R_{3m,m}(z)$ in $\operatorname{Re} z \leqq 0$

m	l_{3m}	$l_{3m}/3m$
1	3	1
2	6	1
3	9	1
4	10	0.8333
5	13	0.8667
6	16	0.8889
7	17	0.8095
8	20	0.8333
9	23	0.8519
10	26	0.8667

of zeros of $s_n(z)$ in $\operatorname{Re} z \leqq 0$, then, as shown by Szegö,

$$\lim_{n\to\infty} \frac{\check{\tau}_n}{n} = \frac{1}{2} + \frac{1}{e\pi} \qquad (\sigma = 0).$$

In a similar fashion, we can use (2.10) of Theorem 2.3 to deduce the following. If we consider the sequence of Padé approximants $\{R_{3m,m}(z)\}_{m=1}^{\infty}$, corresponding to the case $\sigma = 1/3$, then all the zeros of $\{R_{3m,m}(z)\}_{m=1}^{\infty}$, from Theorem 1.1, lie in $S_{1/3} = \left\{z : |\arg z| > \cos^{-1}(\tfrac{1}{2}) = \frac{\pi}{3}\right\}$. Now, let l_{3m} denote the number of zeros of $R_{3m,m}(z)$ in $\operatorname{Re} z \leqq 0$. Then, to apply Theorem 2.3, the endpoints of the closed arc $d_{1/3}$ in this case are approximately $\mu_1 \doteqdot 0.706999\, i$ and $\mu_2 \doteqdot -0.706999\, i$, from which it follows that $\hat{\phi}_1 = \arg w_{1/3}(\mu_1) \doteqdot 1.193433$ rad., and $\hat{\phi}_2 = \arg w_{1/3}(\mu_2) \doteqdot 5.089752$ rad. Thus, from (2.10) we have

$$\lim_{m\to\infty} \frac{l_{3m}}{3m} = \frac{2(\hat{\phi}_2 - \hat{\phi}_1)}{3\pi} \doteqdot 0.826824 \qquad (\sigma = 1/3). \tag{2.13}$$

To numerically corroborate this result of (2.13), we give in Table 1 the actual number of zeros of $R_{3m,m}(z)$ in $\operatorname{Re} z \leqq 0$ for $m = 1(1)10$. Note that the result of the particular case $m = 8$ can be checked from Figure 2. Although the convergence of the ratio $l_{3m}/3m$ is, from Table 1, slow, reasonable agreement with (2.13) is evident for small values of m.

The result of (2.10) of Theorem 2.3 can also be formulated as follows. Given any sector $S(\psi_1, \psi_2) := \{z = re^{i\theta} : \psi_1 \leqq \theta \leqq \psi_2\}$ contained in $\bar{S}_\sigma$ (cf. (1.6)) with $0 \leqq \psi_1 < \psi_2 \leqq 2\pi$, let $\tau_{n_j}^{(1)}(\psi_1, \psi_2)$ denote the number of zeros of $R_{n_j, \nu_j}(z)$ in $S(\psi_1, \psi_2)$. Then, assuming (2.6), there is a positive constant $m(\psi_1, \psi_2, \sigma)$ such that

$$\lim_{j\to\infty} \tau_{n_j}^{(1)}(\psi_1, \psi_2)/n_j = m(\psi_1, \psi_2, \sigma), \tag{2.10'}$$

where the constant $m(\psi_1, \psi_2, \sigma)$ can be precisely determined from (2.10). We remark that the existence of positive lower bounds for $\tau_{n_j}^{(1)}(\psi_1, \psi_2)/n_j$ for the particular case $\sigma = 0$ and suitable sequences $\{n_j\}_{j=1}^{\infty}$ has been recently announced by Edrei [3, 4], for more general entire functions than e^z.

3. Proof of Proposition 2.1

In this section, we collect some old and some apparently new results on Whittaker functions from which Proposition 2.1 will follow as a special case.

Using the notation

$$(a)_j := a(a+1)\dots(a+j-1), \quad j \geqq 1, \qquad (a)_0 := 1,$$

it is well-known (cf. Olver [7, p. 255]) that the confluent hypergeometric function

$${}_1F_1(a;c;z) := \sum_{j=0}^{\infty} \frac{(a)_j z^j}{(c)_j j!}, \qquad c \neq 0, -1, -2, \dots,$$

has the integral representation

$${}_1F_1(a;c;z) = \frac{\Gamma(c)}{\Gamma(a)\Gamma(c-a)} \int_0^1 e^{zt}(1-t)^{c-a-1} t^{a-1}\, dt, \tag{3.1}$$

when $\operatorname{Re} c > \operatorname{Re} a > 0$. It is further known (cf. Olver [7, p. 260]) that the related Whittaker functions $M_{k,m}(z)$, defined by

$$M_{k,m}(z) := e^{-z/2} z^{c/2}\, {}_1F_1(a;c;z) \quad \text{with} \quad k = \frac{c}{2} - a, \quad m = \frac{c-1}{2}, \tag{3.2}$$

satisfy Whittaker's equation

$$w''(z) = \left\{ \frac{1}{4} - \frac{k}{z} + \frac{m^2 - \frac{1}{4}}{z^2} \right\} w(z). \tag{3.3}$$

Calling any $z \neq 0$ for which $M_{k,m}(z) = 0$ a *nontrivial* zero of $M_{k,m}$, we next state

Lemma 3.1 (Tsvetkoff [15, Thm. 7]). Let k and m be real with $2m+1>0$. Then,

i) if $k>0$, all nontrivial zeros of $M_{k,m}(z)$ satisfy $\operatorname{Re} z > 2k$;
ii) if $k<0$, all nontrivial zeros of $M_{k,m}(z)$ satisfy $\operatorname{Re} z < 2k$;
iii) if $k=0$, all nontrivial zeros of $M_{k,m}(z)$ are purely imaginary. (3.4)

We take this opportunity to point out that Theorem 11 of Tsvetkoff [15], concerning the Whittaker functions $W_{k,m}(z)$, is *false*. Tsvetkoff asserts in his Theorem 11 that when $k>0$, $W_{k,m}(z)$, defined (cf. Olver [7, pp. 257 and 260]) by

$$W_{k,m}(z) = \frac{e^{-z/2} z^{-m+1/2}}{\Gamma(m-k+1/2)} \int_0^{\infty} e^{-t} t^{m-k-1/2} (t+z)^{m+k-1/2}\, dt$$

for $\operatorname{Re}(m-k+\frac{1}{2})>0$, cannot have zeros in $\operatorname{Re} z \leqq 0$, except on the real axis. To show that this is false, it can be seen from the above definition and from the definition of the Padé numerator $P_{n,\nu}(z)$ in (1.3) that

$$\nu!\, W_{\frac{n-\nu}{2}, \frac{n+\nu+1}{2}}(z) = (n+\nu)!\, e^{-z/2} z^{-\left(\frac{n+\nu}{2}\right)} P_{n,\nu}(z), \tag{3.5}$$

for any nonnegative integers n and v. Now, for $n>v$, $P_{n,v}(z)$ *can* have nonreal zeros in $\operatorname{Re} z \geqq 0$. Indeed, Theorem 2.2 shows that for sequences of Padé approximants satisfying (2.6) with $0 \leqq \sigma < \infty$, the zeros of the associated normalized sequence of Padé numerators have a continuum of nonreal limit points in $\operatorname{Re} z \geqq 0$. Tsvetkoff's proof breaks down because he asserts that

$$\int_1^\infty \left[-\tfrac{1}{4}(\tau+\bar{\tau})+\frac{k}{x}\right] \cdot |W_{k,m}(\tau x)|^2\, dx = 0,$$

where τ (and hence $\bar{\tau}$) is a nonreal zero of $W_{k,m}(z)$. However, because of the factor $e^{-z/2}$ in (3.5), the integration above can take place only on a ray in the right-half plane, i.e., only if the zero τ satisfies $\operatorname{Re} \tau > 0$.

The following result is apparently new.

Proposition 3.2. If $m>0$, then every nontrivial zero of $M_{k,m}(z)$ lies in the region

$$\{z=x+iy: x>2k \text{ and } y^2>x^2(4m^2-4k^2-1)/4k^2\} \quad \text{if } k>0; \tag{3.6}$$

$$\{z=x+iy: x<2k \text{ and } y^2>x^2(4m^2-4k^2-1)/4k^2\} \quad \text{if } k<0; \tag{3.7}$$

$$\{z=iy: y^2>(4m^2-1)\} \quad \text{if } k=0. \tag{3.8}$$

Proof. If $w(z)$ is a solution of the differential equation $w''+G(z)w=0$, it is well-known (cf. Hille [5, p. 286]) that

$$\overline{(w(z)\cdot w'(z))}\Big|_{z_1}^{z_2} - \int_{z_1}^{z_2} |w'(t)|^2\, \overline{dt} + \int_{z_1}^{z_2} G(t)\,|w(t)|^2\, dt = 0. \tag{3.9}$$

In the case of the Whittaker equation (3.3), $G(z)$ is given by

$$G(z) = \frac{k}{z} - \frac{m^2-\frac{1}{4}}{z^2} - \frac{1}{4}. \tag{3.9'}$$

Now, let $0 \neq z_0 = x_0 + iy_0$ be a zero of $M_{k,m}(z)$. The hypothesis $m>0$ implies (cf. (3.2)) that $c>1$. Thus, for $w(z)=M_{k,m}(z)$, we can integrate from $z_1=0$ to $z_2=z_0$ in (3.9) to obtain

$$-\int_0^{z_0} |M'_{k,m}(t)|^2\, \overline{dt} + \int_0^{z_0} G(t)\,|M_{k,m}(t)|^2\, dt = 0.$$

Setting $t=\rho z_0$, $0 \leqq \rho \leqq 1$, this becomes with (3.9′)

$$\int_0^1 \left[\frac{k}{\rho} - \frac{m^2-\frac{1}{4}}{\rho^2 z_0} - \frac{z_0}{4}\right] \cdot |M_{k,m}(\rho z_0)|^2\, d\rho = \int_0^1 |M'_{k,m}(\rho z_0)|^2\, \bar{z}_0\, d\rho.$$

Taking real parts on both sides then gives

$$\int_0^1 \left[\frac{k}{\rho} - \frac{(m^2-1/4)\,x_0}{\rho^2(x_0^2+y_0^2)} - \frac{x_0}{4}\right] \cdot |M_{k,m}|^2\, d\rho = \int_0^1 |M'_{k,m}|^2\, x_0\, d\rho.$$

Now, suppose that $k>0$. Then, from (3.4i) of Lemma 3.1, $\operatorname{Re} z_0 = x_0 > 2k > 0$, whence

$$\int_0^1 \left[\frac{k}{\rho} - \frac{(m^2-1/4)\,x_0}{\rho^2(x_0^2+y_0^2)} - \frac{x_0}{4}\right] \cdot |M_{k,m}|^2\, d\rho > 0,$$

or equivalently

$$\int_0^1 \left[\frac{4k(x_0^2+y_0^2)\,\rho - (4m^2-1)\,x_0 - x_0(x_0^2+y_0^2)\,\rho^2}{4\rho^2(x_0^2+y_0^2)}\right] \cdot |M_{k,m}|^2\, d\rho > 0. \tag{3.10}$$

The positivity of this integral implies that the quadratic in ρ in the numerator of the integrand of (3.10) must evidently satisfy

$$-x_0(x_0^2+y_0^2)\,\rho^2 + 4k(x_0^2+y_0^2)\,\rho - (4m^2-1)\,x_0 > 0$$

for some ρ with $0<\rho<1$, and this in turn implies that its discriminant must be positive:

$$16k^2(x_0^2+y_0^2)^2 - 4x_0^2(x_0^2+y_0^2)(4m^2-1) > 0. \tag{3.11}$$

Simplifying, (3.11) can be equivalently expressed as

$$y_0^2 > x_0^2(4m^2-4k^2-1)/4k^2,$$

which, with $x_0>2k$, establishes the desired result of (3.6). The proofs of (3.7) and (3.8) are similar. □

We remark that Proposition 3.2 improves and corrects Tsvetkoff's Theorem 3 in [16].

Corollary 3.3. If $m>0$, then every nontrivial zero of $M_{k,m}(z)$ satisfies

$$|z| > \sqrt{4m^2-1}, \quad \text{whenever} \quad 4m^2-1>0. \tag{3.12}$$

Proof. Suppose that $k>0$, and let $0 \neq z_0 = x_0 + iy_0$ be a zero of $M_{k,m}$. By (3.6) of Proposition 3.2, we have $y_0^2 > x_0^2(4m^2-4k^2-1)/4k^2$, or $x_0^2+y_0^2 > x_0^2(4m^2-1)/4k^2$. But as $x_0^2 > 4k^2$ also from (3.6), then

$$x_0^2+y_0^2 > 4m^2-1,$$

which gives (3.12). The cases $k<0$ and $k=0$ are similar. □

Proof of Proposition 2.1. From the identities of (3.1) and (3.2), it follows that

$$M_{\frac{n-\nu}{2},\frac{n+\nu+1}{2}}(z) = \frac{(n+\nu+1)!}{\nu!\,n!}\, e^{-z/2}\, z^{\left(\frac{n+\nu+2}{2}\right)} \int_0^1 e^{zt}(1-t)^n\, t^\nu\, dt$$

for any nonnegative integers n and ν. Comparison with the integral representation (1.5) thus shows that the above relation can be expressed as

$$M_{\frac{n-\nu}{2},\frac{n+\nu+1}{2}}(z) = (-1)^\nu \frac{(n+\nu)!\,(n+\nu+1)!}{\nu!\,n!}\, e^{-z/2}\, z^{-\left(\frac{n+\nu}{2}\right)} (e^z Q_{n,\nu}(z) - P_{n,\nu}(z)), \tag{3.13}$$

whence any nontrivial zero of the Padé remainder $e^z Q_{n,\nu}(z) - P_{n,\nu}(z)$ is a nontrivial zero of $M_{\frac{n-\nu}{2},\frac{n+\nu+1}{2}}(z)$, and conversely. Now, in this case, $k = \left(\frac{n-\nu}{2}\right)$ and $m = \left(\frac{n+\nu+1}{2}\right)$, from which it follows that $m > 0$ if $n+\nu > 0$. Applying (3.12) of Corollary 3.3 gives that the nontrivial zeros of $e^z Q_{n,\nu}(z) - P_{n,\nu}(z)$ satisfy $|z| > \sqrt{4m^2-1} = \sqrt{(n+\nu)(n+\nu+2)}$, the desired result of (2.1) of Proposition 2.1 □

We remark that for the case of positive integers n and ν with $n = \nu$, it follows from (3.4iii) of Lemma 3.1 and Proposition 2.1 that every nontrivial zero z of $e^z Q_{n,n}(z) - P_{n,n}(z)$ is purely imaginary, with $|z| > \sqrt{(n+\nu)(n+\nu+2)} = 2\sqrt{n(n+1)}$.

4. Proof of Theorem 2.2

We begin this section by deriving the following useful property of the function $w_\sigma(z)$.

Lemma 4.1. For any σ with $0 \leqq \sigma < \infty$, the function $w_\sigma(z)$, as defined in (2.5)–(2.5′), is univalent in $|z| < 1$.

Proof. Assume first that $0 < \sigma < \infty$. From the definition of g_σ in (2.4), it follows that $g_\sigma^2(z) = -\eta < 0$ implies that $z = (1-\sigma \pm i\alpha)/(1+\sigma)$, where $\alpha := \sqrt{4\sigma + \eta(1+\sigma)^2}$ satisfies $\alpha > 2\sqrt{\sigma}$. Hence, by definition (2.3), $z \in \mathscr{R}_\sigma$. With this and the fact that the principal branch for the square root is chosen in the definition of g_σ, then

$$-\frac{\pi}{2} < \arg g_\sigma(z) < \frac{\pi}{2} \qquad \forall\, z \in \mathbb{C} \setminus \mathscr{R}_\sigma,$$

or equivalently

$$\operatorname{Re} g_\sigma(z) > 0 \qquad \forall\, z \in \mathbb{C} \setminus \mathscr{R}_\sigma. \tag{4.1}$$

Next, a straight-forward calculation based on the definition of $w_\sigma(z)$ in (2.5) shows[1] that

$$\frac{z w_\sigma'(z)}{w_\sigma(z)} = g_\sigma(z) \qquad \forall\, z \in \mathbb{C} \setminus \mathscr{R}_\sigma. \tag{4.2}$$

Thus, with (4.1) and the fact that the open unit disk is a subset of $\mathbb{C} \setminus \mathscr{R}_\sigma$ (as shown in Fig. 1), then

$$\operatorname{Re}\left\{\frac{z w_\sigma'(z)}{w_\sigma(z)}\right\} > 0 \qquad \text{in } |z| < 1. \tag{4.3}$$

Moreover, from (2.5′), we directly verify that (4.3) is valid also for $\sigma = 0$. Now, as is well-known (cf. Sansone and Gerretson [13, p. 211]), (4.3) implies that $w_\sigma(z)$ is univalent (and starlike) in $|z| \geqq 1$ for any $0 \leqq \sigma < \infty$. □

[1] We remark that Equation (4.2) arises in a natural way by applying the Liouville transformation [7, p. 191] to the differential Equation (3.3)

We remark that, using (4.3), it can be shown that for any θ with $-\pi<\theta<\pi$, there is a unique $r_\sigma(\theta)$ with $0<r_\sigma(\theta)\leqq 1$ for which $|w_\sigma(r_\sigma(\theta)\,e^{i\theta})|=1$, and, moreover, that $r_\sigma(\theta)=1$ only if $\theta=\pm\cos^{-1}\left(\frac{1-\sigma}{1+\sigma}\right)$. Hence, the set

$$G_\sigma:=\{z\in\mathbb{C}:\ |w_\sigma(z)|=1 \text{ and } |z|\leqq 1\}, \tag{4.4}$$

is then a well-defined Jordan curve which lies interior to the unit disk, except for its points $z_\sigma^\pm$ of (2.2). As a consequence of (2.7) and (2.8), note that $G_\sigma=D_\sigma\cup E_\sigma$. so that D_σ and E_σ are well-defined Jordan arcs.

Proof of Theorem 2.2. Because the case $\sigma=0$ is similar, consider a fixed σ with $0<\sigma<\infty$ and any sequence of Padé numerators $\{P_{n_j,\nu_j}(z)\}_{j=1}^\infty$ for which (2.6) is valid:

$$\lim_{j\to\infty} n_j=+\infty, \quad \text{and} \quad \lim_{j\to\infty}(\nu_j/n_j)=\sigma.$$

For notational simplicity, we now write n and ν, respectively, for n_j and ν_j. By virtue of Theorems 1.1 and 1.2, any zero z of $P_{n,\nu}((n+\nu)z)$ satisfies

$$z\in S_{n,\nu} \quad \text{and} \quad 0<\mu<|z|<1+\frac{4}{3(n+\nu)}, \qquad \forall j\geqq 1.$$

Consequently, any limit point $\hat{z}$ of zeros of $\{P_{n,\nu}((n+\nu)z)\}_{j=1}^\infty$ belongs to the closed set

$$\{z\in\bar{S}_\sigma:\ 0<\mu\leqq|z|\leqq 1\},$$

where $\bar{S}_\sigma$ denotes the closure of the sector S_σ (cf. (1.6)). To complete the necessity of (2.7) of Theorem 2.2, it remains to show that any such limit point $\hat{z}$ satisfies $|w_\sigma(\hat{z})|=1$. If $\hat{z}=z_\sigma^+$ or if $\hat{z}=z_\sigma^-$, then, as previously noted, $\hat{z}\in G_\sigma$, whence $|w_\sigma(\hat{z})|=1$ from (4.4). Thus, we may assume in what follows that $z=\hat{z}$ satisfies

$$z\in\mathbb{C}\setminus(\mathscr{R}_\sigma\cup\{0\}), \tag{4.5}$$

so that in particular, $z\neq 0$ and $z\neq z_\sigma^\pm$.

From the explicit formula (1.3), it can be verified that $P_{n,\nu}(z)$ has the following integral representation:

$$(n+\nu)!\,P_{n,\nu}(z)=\int_0^\infty e^{-t}(t+z)^n\,t^\nu\,dt \qquad \forall j\geqq 1,$$

the path of integration being the nonnegative real axis. Replacing z and t respectively by $(n+\nu)z$ and $(n+\nu)t$, and defining

$$\tilde{h}_j(t)=\tilde{h}_j(t;z):=-t+\left(\frac{n}{n+\nu}\right)\ln(t+z)+\left(\frac{\nu}{n+\nu}\right)\ln t, \qquad \forall j\geqq 1, \tag{4.6}$$

this integral representation for $P_{n,\nu}(z)$ becomes

$$\frac{(n+\nu)!\,P_{n,\nu}((n+\nu)z)}{(n+\nu)^{n+\nu+1}}=\int_0^\infty e^{(n+\nu)\tilde{h}_j(t)}dt, \qquad \forall j\geqq 1. \tag{4.7}$$

As defined, $\tilde{h}_j$ is a multi-valued function of t which is analytic on $\mathbb{C}\setminus\{0, -z\}$, and for each $z\in\mathbb{C}\setminus(\mathscr{R}_\sigma\cup\{0\})$, $\tilde{h}_j(t;z)$ can be defined to be single-valued and analytic as a function of t on the complement of two suitable cuts T in the t-plane, respectively joining $t=0$ and $t=-z$ with infinity. Note however that $\exp[(n+\nu)\tilde{h}_j(t)]$ is analytic and single-valued for all t. Next, from (4.7) and from (1.3)–(1.4), it can also be verified that

$$\frac{(n+\nu)!\,e^{(n+\nu)z}\,Q_{n,\nu}((n+\nu)z)}{(n+\nu)^{n+\nu+1}}=\int_{-z}^{\infty} e^{(n+\nu)\tilde{h}_j(t)}\,dt, \qquad \forall j\geqq 1, \tag{4.8}$$

the path of integration being the horizontal ray $-z+u$ for $u\geqq 0$, and from (1.5),

$$\frac{(n+\nu)!\,\{e^{(n+\nu)z}\,Q_{n,\nu}((n+\nu)z)-P_{n,\nu}((n+\nu)z)\}}{(n+\nu)^{n+\nu+1}}=\int_{-z}^{0} e^{(n+\nu)\tilde{h}_j(t)}\,dt, \qquad \forall j\geqq 1, \tag{4.9}$$

the path of integration being chosen to be the line segment from $-z$ to 0. Finally, from (2.6), we can define, in analogy with (4.6), the function

$$h_\sigma(t)=h_\sigma(t;z):=-t+\{\ln(t+z)+\sigma\ln t\}/(1+\sigma), \tag{4.6'}$$

and we now investigate the zeros of $\tilde{h}_j'(t)$ and $h_\sigma'(t)$.

From (4.6), the derivative of $\tilde{h}_j$ is

$$\tilde{h}_j'(t)=-1+\frac{1}{(n+\nu)}\{n(t+z)^{-1}+\nu t^{-1}\},$$

whose only zeros, $\tilde{t}_j^+(z)$ and $\tilde{t}_j^-(z)$, are

$$\tilde{t}_j^\pm(z):=\tfrac{1}{2}\{1-z\pm\tilde{g}_j(z)\}, \tag{4.10}$$

where

$$\tilde{g}_j(z):=\sqrt{1+z^2-2z\left(\frac{n-\nu}{n+\nu}\right)}. \tag{4.11}$$

In analogy with the definition of (2.2), the points

$$\tilde{z}_j^\pm:=\{(n-\nu)\pm 2\sqrt{\nu n}\,i\}/(n+\nu)=\exp\left\{\pm i\cos^{-1}\left(\frac{n-\nu}{n+\nu}\right)\right\}$$

are the branch points of $\tilde{g}_j$, and we can similarly consider the complex plane $\mathbb{C}$ slit along the two rays

$$\tilde{\mathscr{R}}_j:=\{z\colon\ z=\tilde{z}_j^+ +i\tau \ \text{ or } \ z=\tilde{z}_j^- -i\tau,\ \forall\,\tau\geqq 0\}.$$

On setting $\tilde{g}_j(0)=1$ and extending $\tilde{g}_j$ analytically on $\mathbb{C}\setminus\tilde{\mathscr{R}}_j$, then $\tilde{g}_j$ is analytic and single-valued on $\mathbb{C}\setminus\mathscr{R}_j$ for all $j\geqq 1$, the same being true for the functions $\tilde{t}_j^\pm(z)$ of (4.10). Note that with (2.4) and (2.6),

$$\lim_{j\to\infty}\tilde{t}_j^\pm(z)=\tfrac{1}{2}\{1-z\pm g_\sigma(z)\}=:t_\sigma^\pm(z), \qquad \forall\, z\in\mathbb{C}\setminus(\mathscr{R}_\sigma\cup\{0\}). \tag{4.12}$$

and that $t_\sigma^\pm(z)$ are correspondingly the zeros of $h_\sigma'(t)$.

Next, it can be readily verified from the assumption of (4.5) that

$$\left.\begin{array}{ll} \text{i)} & t_\sigma^+(z) \neq t_\sigma^-(z) \\ \text{ii)} & t_\sigma^\pm(z) \neq 0 \\ \text{iii)} & t_\sigma^\pm(z) \neq -z \end{array}\right\} \quad \forall\, z \in \mathbb{C} \setminus (\mathscr{R}_\sigma \cup \{0\}). \tag{4.13}$$

Thus, from (4.12),

$$\left.\begin{array}{ll} \text{i)} & \tilde{t}_j^+(z) \neq \tilde{t}_j^-(z) \\ \text{ii)} & \tilde{t}_j^\pm(z) \neq 0 \\ \text{iii)} & \tilde{t}_j^\pm(z) \neq -z \end{array}\right\} \quad \forall\, z \in \mathbb{C} \setminus (\mathscr{R}_\sigma \cup \{0\}),\ \forall\, j \text{ suff. large.} \tag{4.13'}$$

From (4.6), we further have that

$$\tilde{h}_j^{(k)}(t) = \frac{(k-1)!\,(-1)^{k+1}}{(n+\nu)} \{n(t+z)^{-k} + \nu t^{-k}\}, \qquad \forall\, k \geqq 2, \tag{4.14}$$

and, on using the case $k=2$, it can be verified from (4.5) that

$$\begin{array}{ll} \tilde{h}_j^{(2)}(\tilde{t}_j^\pm(z)) \neq 0 & \text{for all } j \text{ sufficiently large, and} \\ h_\sigma^{(2)}(t_\sigma^\pm(z)) \neq 0. & \end{array} \tag{4.14'}$$

In other words, for $0<\sigma<\infty$ and for $z \in \mathbb{C} \setminus (\mathscr{R}_\sigma \cup \{0\})$, $\tilde{t}_j^+(z)$ and $\tilde{t}_j^-(z)$ are distinct saddle points (of order one) of $\tilde{h}_j(t)$, for all j sufficiently large, and $t_\sigma^\pm(z)$ are distinct saddle points (of order one) of $h_\sigma(t)$.

We now seek to obtain asymptotic estimates for the integrals of (4.7)–(4.9), as $j \to \infty$, by means of the *steepest descent method* (cf. [1, 7]). To this end, we examine the particular functions

$$I_j^\pm(z;\delta) := \int_{\gamma_j^\pm(\delta)} e^{(n+\nu)\tilde{h}_j(t)}\, dt, \tag{4.15}$$

where the paths of integration, $\gamma_j^\pm(\delta)$, are respectively the line segments $t = \tilde{t}_j^\pm(z) + \rho e^{i\theta_j^\pm}$ with $-\delta \leqq \rho \leqq +\delta$, where $\delta > 0$ and where $\theta_j^\pm$ are to be specified below. Now, for any compact subset K of $\mathbb{C} \setminus (\mathscr{R}_\sigma \cup \{0\})$, it can be verified that $\delta > 0$ can be chosen sufficiently small so that each line segment is a positive distance from $t=0$, $t = -z$, and from the other line segment, independent of the choices of $\theta_j^\pm$, for all $z \in K$, for all j sufficiently large.

Now, for suitable cuts T joining $t=0$ and $t=-z$ with infinity but not passing through $\tilde{t}_j^\pm(z)$, we can expand $\tilde{h}_j$ about $\tilde{t}_j^\pm(z)$, and as $\tilde{h}_j'(\tilde{t}_j^\pm(z) = 0$, we obtain

$$\tilde{h}_j(t) = \tilde{h}_j(\tilde{t}_j^\pm(z)) + \sum_{k=2}^{\infty} \frac{(\rho e^{i\theta_j^\pm})^k}{k!} \tilde{h}_j^{(k)}(\tilde{t}_j^\pm(z)), \qquad t \in \gamma_j^\pm(\delta).$$

Recalling that $\tilde{h}_j^{(2)}(\tilde{t}_j^\pm(z)) \neq 0$ for all j sufficiently large, let $\tau_j^\pm := \arg \tilde{h}_j^{(2)}(\tilde{t}_j^\pm(z))$, and set

$$\theta_j^\pm := \frac{\pi - \tau_j^\pm}{2}.$$

For these choices of $\theta_j^{\pm}$, it follows from the expansion above that

$$\tilde{h}_j(\tilde{t}_j^{\pm}(z)+\rho e^{i\theta_j^{\pm}})=\tilde{h}_j(\tilde{t}_j^{\pm}(z))-\frac{\rho^2}{2}|\tilde{h}_j^{(2)}(\tilde{t}_j^{\pm}(z))|+O(\rho^3),$$

as $\rho\to 0$. Thus, for any compact subset K of $\mathbb{C}\setminus(\mathscr{R}_\sigma\cup\{0\})$, there exist $\delta>0$, $\Delta>0$, and $J>0$ (in general dependent on K) such that

$$\operatorname{Re}\tilde{h}_j(\tilde{t}_j^{\pm}(z)\pm\delta e^{i\theta_j^{\pm}})\leqq\operatorname{Re}\tilde{h}_j(\tilde{t}_j^{\pm}(z))-\Delta, \tag{4.16}$$

for all $z\in K$, all $j\geqq J$. Next, with the change of variables

$$\rho=\frac{\alpha_j^{\pm}u}{\sqrt{n+\nu}},\quad\text{where}\quad \alpha_j^{\pm}:=\left\{\frac{2}{|\tilde{h}_j^{(2)}(\tilde{t}_j^{\pm}(z))|}\right\}^{1/2}>0,$$

then

$$\tilde{h}_j(t)=\tilde{h}_j(\tilde{t}_j^{\pm}(z))-\frac{u^2}{(n+\nu)}+\sum_{k=3}^{\infty}\left\{\frac{\alpha_j^{\pm}ue^{i\theta_j^{\pm}}}{\sqrt{n+\nu}}\right\}^k\frac{\tilde{h}_j^{(k)}(\tilde{t}_j^{\pm}(z))}{k!},$$

and the integral $I_j^{\pm}(z;\delta)$ of (4.15) can be expressed as

$$I_j^{\pm}(z;\delta)=\frac{\alpha_j^{\pm}\exp\{(n+\nu)\tilde{h}_j(\tilde{t}_j^{\pm}(z))+i\theta_j^{\pm}\}}{\sqrt{n+\nu}}\int_{-\delta\sqrt{n+\nu}/\alpha_j^{\pm}}^{\delta\sqrt{n+\nu}/\alpha_j^{\pm}}e^{-u^2}\exp\left\{(n+\nu)\sum_{k=3}^{\infty}\right\}du \tag{4.17}$$

where the sum in the above integral is the same as in the previous display. Thus, on making the Maclaurin expansion of the integrand, integrating termwise, and using the facts that $\int_{-M}^{+M}e^{-u^2}u^k\,du=0$ for any odd positive integer k and any $M>0$, and that $\int_{-M}^{+M}e^{-u^2}du\to\sqrt{\pi}$ as $M\to\infty$, it follows that the integral on the right of (4.17) satisfies (cf. [1, 7])

$$\sqrt{\pi}\,\{1+O((n+\nu)^{-1})\},\qquad\text{as } j\to\infty,$$

where the modulus of the multiplier of $(n+\nu)^{-1}$ in the last term above, is bounded above by

$$\left|\frac{\tilde{h}_j^{(4)}(\tilde{t}_j^{\pm}(z))}{(\tilde{h}_j^{(2)}(\tilde{t}_j^{\pm}(z)))^2}\right|+\left|\frac{(\tilde{h}_j^{(3)}(\tilde{t}_j^{\pm}(z)))^2}{(\tilde{h}_j^{(2)}(\tilde{t}_j^{\pm}(z)))^3}\right|.$$

However, because of (4.13)–(4.13′), we see from (4.14) that this sum is bounded above, *uniformly* on any compact subset of $\mathbb{C}\setminus(\mathscr{R}_\sigma\cup\{0\})$, as $j\to\infty$. Combining, then

$$I_j^{\pm}(z;\delta)=e^{(n+\nu)\tilde{h}_j(\tilde{t}_j^{\pm}(z))}\left|\frac{2\pi}{(n+\nu)\tilde{h}_j^{(2)}(\tilde{t}_j^{\pm}(z))}\right|^{1/2}e^{i\theta_j^{\pm}}\{1+O((n+\nu)^{-1})\}, \tag{4.18}$$

as $j\to\infty$, uniformly on any compact subset of $\mathbb{C}\setminus(\mathscr{R}_\sigma\cup\{0\})$.

We now extend both ends of the line segment $\gamma_j^+(\delta)$: $t=\tilde{t}_j^+(z)+\rho e^{i\theta_j^+}$, $-\delta\leqq\rho\leqq\delta$, by means of the curves $\Gamma_{j,1}^+=\Gamma_{j,1}^+(z)$ and $\Gamma_{j,2}^+=\Gamma_{j,2}^+(z)$ defined by

$$\begin{aligned}\Gamma_{j,1}^+ &:=\{t\in\mathbb{C}:\ \operatorname{Im}\tilde{h}_j(t)=\operatorname{Im}\tilde{h}_j(\tilde{t}_j^+(z)+\delta e^{i\theta_j^+})\ \text{and}\\ &\qquad\operatorname{Re}\tilde{h}_j(t)\leqq\operatorname{Re}\tilde{h}_j(\tilde{t}_j^+(z)+\delta e^{i\theta_j^+})\},\\ \Gamma_{j,2}^+ &:=\{t\in\mathbb{C}:\ \operatorname{Im}\tilde{h}_j(t)=\operatorname{Im}\tilde{h}_j(\tilde{t}_j^+(z)-\delta e^{i\theta_j^+})\ \text{and}\\ &\qquad\operatorname{Re}\tilde{h}_j(t)\leqq\operatorname{Re}\tilde{h}_j(\tilde{t}_j^+(z)-\delta e^{i\theta_j^+})\},\end{aligned}$$

so that $\Gamma_{j,1}^+$ and $\Gamma_{j,2}^+$ are *descent paths* for $\tilde{h}_j(t)$ (cf. [1, 7]). Note that since $\tilde{h}_j'(t)$ can vanish only for $t=\tilde{t}_j^\pm(z)$, these descent paths are then well-defined from the local univalence of $\tilde{h}_j$, away from $\tilde{t}_j^\pm(z)$, for a suitable choice of the cuts T. If one of these descent paths, say $\Gamma_{j,2}^+$, passes through $\tilde{t}_j^-(z)$, then necessarily

$$\begin{aligned}&\operatorname{Im}\tilde{h}_j(\tilde{t}_j^+(z)-\delta e^{i\theta_j^+})=\operatorname{Im}\tilde{h}_j(\tilde{t}_j^-(z)),\\ &\operatorname{Re}\tilde{h}_j(\tilde{t}_j^-(z))<\operatorname{Re}\tilde{h}_j(\tilde{t}_j^+(z)-\delta e^{i\theta_j^\pm}),\end{aligned}\tag{4.19}$$

and $\Gamma_{j,2}^+$ then consists of two branches for $\operatorname{Re}\tilde{h}_j(t)<\operatorname{Re}\tilde{h}_j(\tilde{t}_j^-)$. We select either one of these branches to specify $\Gamma_{j,2}^+$. In the same manner, we extend both ends of the line segment $\gamma_j^-(\delta)$ by means of the descent paths $\Gamma_{j,1}^-$ and $\Gamma_{j,2}^-$ in the t-plane. Next, from (4.6),

$$\operatorname{Re}\tilde{h}_j(t)=-u+\left(\frac{n}{n+v}\right)\ln|t+z|+\left(\frac{v}{n+v}\right)\ln|t|,\qquad t:=u+iv,\tag{4.20}$$

so that $\operatorname{Re}\tilde{h}_j(t)\to-\infty$ implies that $t\to-z$, $t\to0$, or that $u\to+\infty$. Thus, for any $z\in\mathbb{C}\setminus(\mathscr{R}_\sigma\cup\{0\})$, $\Gamma_{j,1}^\pm$ and $\Gamma_{j,2}^\pm$ are curves in the t-plane, which extend to $t=-z$ or $t=0$, or $u\to-\infty$. If, say, the curve $\Gamma_{j,1}^+$ is such that $u\to+\infty$, it can be verified that the points $t=u+iv$ of $\Gamma_{j,1}^+$ behave asymptotically as

$$\begin{aligned}v\quad &=-K^++\frac{1}{u}\left\{\frac{n\operatorname{Im}z}{(n+v)}-K^+\right\}+O\left(\frac{1}{u^2}\right),\quad u\to+\infty,\quad\text{where}\\ &\qquad K^+:=\operatorname{Im}\tilde{h}_j(\tilde{t}_j^+(z)+\delta e^{i\theta_j^+}).\end{aligned}\tag{4.20$'$}$$

Similar asymptotic relations can be derived if the curves $\Gamma_{j,1}^\pm$ and $\Gamma_{j,2}^\pm$ tend to $t=0$ or to $t=-z$.

To illustrate this, consider the special case of $\{P_{j,j}(2jz)\}_{j=1}^\infty$ for which $\sigma=1$ (cf. (2.6)). In this case, $\tilde{h}_j(t)$ is independent of j. For the choice $z=\frac{1}{2}\exp\left(\frac{3\pi i}{4}\right)$ and $\delta=\frac{1}{8}$, the line segments $\gamma_j^\pm(\delta)$ (shown as double lines) and the curves $\Gamma_{j,k}^\pm$ (shown as single curves) are given in Figure 3, where the arrows indicate the direction of increasing $\operatorname{Re}\tilde{h}_j(t)$ along these curves.

Next, consider any curve $\Gamma_{j,k}^\pm$ which has either $t=0$ or $t=-z$ as an endpoint. Using the appropriate asymptotic relation as in (4.20′) as $t\to0$ or as $t\to-z$, it can be seen that the integrals $\int_{\Gamma_{j,k}^\pm}e^{(n+v)\tilde{h}_j(t)}dt$ are finite. Moreover, as a consequence

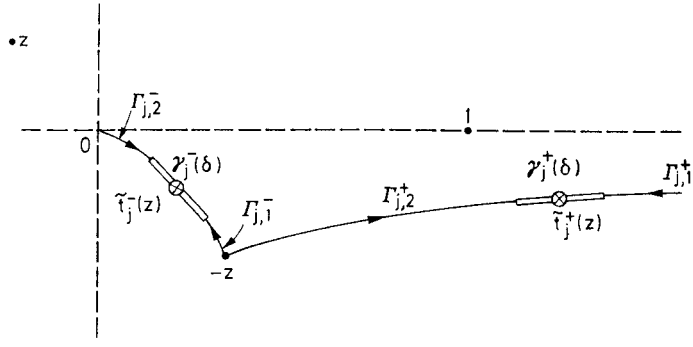

Fig. 3

of (4.16) and the definitions of $\Gamma_{j,k}^{\pm}$, it follows that

$$\left|\int_{\Gamma_{j,k}^{\pm}} e^{(n+\nu)\tilde{h}_j(t)}dt\right| = O\{e^{(n+\nu)(\operatorname{Re}\tilde{h}_j(\tilde{t}_j^{\pm}(z))-\Delta)}\}, \tag{4.21}$$

uniformly on any compact subset of $\mathbb{C}\backslash(\mathscr{R}_\sigma \cup \{0\})$ as $j \to \infty$, where $\Delta > 0$ is independent of j. Actually, because of the asymptotic behavior (4.20′) of such curves $\Gamma_{j,k}^{\pm}$ for which $u \to +\infty$, (4.21) holds for *any* $\Gamma_{j,k}^{\pm}$.

Now, define the curve $\Gamma_j^+ = \Gamma_j^+(z)$ as the union of the line segment $\gamma_j^+(\delta)$ and its extensions $\Gamma_{j,1}^+$ and $\Gamma_{j,2}^+$, and let Γ_j^- be analogously defined.

Because the integrals of (4.21) are exponentially small, as $j \to \infty$, compared with the integral of (4.18), it follows that, with (4.6),

$$\begin{aligned} I_j^{\pm}(z) &:= \int_{\Gamma_j^{\pm}} e^{(n+\nu)\tilde{h}_j(t)}dt = \int_{\Gamma_j^{\pm}} e^{-(n+\nu)t}(t+z)^n t^\nu dt \\ &= e^{(n+\nu)\tilde{h}_j(\tilde{t}_j^{\pm}(z))}\left|\frac{2\pi}{(n+\nu)\tilde{h}_j^{(2)}(\tilde{t}_j^{\pm}(z))}\right|^{1/2} e^{i\theta_j^{\pm}}\left\{1+O\left(\frac{1}{n+\nu}\right)\right\}, \\ &= e^{-(n+\nu)\tilde{t}_j^{\pm}(z)}(\tilde{t}_j^{\pm}(z)+z)^n(\tilde{t}_j^{\pm}(z))^\nu\left|\frac{2\pi}{(n+\nu)\tilde{h}_j^{(2)}(\tilde{t}_j^{\pm}(z))}\right|^{1/2} e^{i\theta_j^{\pm}}\left\{1+O\left(\frac{1}{n+\nu}\right)\right\}, \end{aligned} \tag{4.22}$$

as $j \to \infty$, uniformly on any compact subset of $\mathbb{C}\backslash(\mathscr{R}_\sigma \cup \{0\})$.

As previously mentioned, the endpoints of Γ_j^+ and Γ_j^- are either $t=0$, $t=-z$, or $t=\infty$ with $u \to +\infty$ as in (4.20′), and, of the various possible combinations of endpoints (9 in all) of Γ_j^+ and Γ_j^-, certain combinations can be immediately excluded. For example, suppose that both Γ_j^+ and Γ_j^- have only $t=0$ and $t=-z$ as endpoints, so that $\Gamma_j^+ \cup \Gamma_j^-$ would form a closed curve through $-z$, 0, and the distinct points $\tilde{t}_j^{\pm}(z)$. Now, if a steepest *ascent* curve η at, say, $\tilde{t}_j^+(z)$, is defined by

$$\{t \in \mathbb{C}\colon \operatorname{Im}\tilde{h}_j(t) = \operatorname{Im}\tilde{h}_j(\tilde{t}_j^+(z)) \text{ and } \operatorname{Re}\tilde{h}_j(t) \geqq \operatorname{Re}\tilde{h}_j(\tilde{t}_j^+(z))\},$$

then η is orthogonal to Γ_j^+ at $\tilde{t}_j^+(z)$ since $\tilde{h}_j'(\tilde{t}_j^+(z)) = 0$ and $\tilde{h}_j^{(2)}(\tilde{t}_j^+(z)) \neq 0$, and one branch of η would be confined to the bounded set having $\Gamma_j^+ \cup \Gamma_j^-$ as boundary. But

this contradicts the fact (cf. (4.20)) that $\operatorname{Re}\tilde{h}_j(t)\to+\infty$ implies that $t\to\infty$. Ruling out such cases, only three essentially different cases remain for each $\tilde{h}_j(t)$:

Case 1. Γ_j^- is a curve through $\tilde{t}_j^-(z)$ with endpoints $t=0$ and $t=-z$, and Γ_j^+ is a curve through $\tilde{t}_j^+(z)$ with endpoints $t=-z$ and $t=\infty$ with the asymptotic relation (4.20′) holding (or with Γ_j^+ and Γ_j^- interchanged);

Case 2. Γ_j^- is a curve through $\tilde{t}_j^-(z)$ with endpoints $t=-z$ and $t=0$, and Γ_j^+ is a curve through $\tilde{t}_j^+(z)$ with endpoints $t=0$ and $t=\infty$ with the asymptotic relation (4.20′) holding (or with Γ_j^+ and Γ_j^- interchanged);

Case 3. Γ_j^- is a curve through $\tilde{t}_j^-(z)$ with endpoints $t=0$ and $t=\infty$ with the asymptotic relation (4.20′) holding, and Γ_j^+ is a curve through $\tilde{t}_j^+(z)$ with endpoints $t=-z$ and $t=\infty$ with the asymptotic relation (4.20′) holding (or with Γ_j^- and Γ_j^+ interchanged).

We remark that all three of the above cases *can* occur. Figure 3, for example, corresponds to the curves of Case 1. In addition, where there is a selection of branches to specify Γ_j^+ or Γ_j^- as in (4.19), more than one of the above cases simultaneously apply.

It is now important to point out that descent curves Γ^+ and Γ^- through $t_\sigma^\pm(z)$ (cf. (4.12))can similarly be defined for $h_\sigma(t)$ of (4.6′) when $z\in\mathbb{C}\setminus(\mathscr{R}_\sigma\cup\{0\})$, and that the classification of the above three cases can be applied to these curves. Moreover, because of the assumption of (2.6), it follows from (4.6) that

$$\lim_{j\to\infty}\tilde{h}_j(t)=h_\sigma(t),$$

uniformly on any compact subset of $\mathbb{C}\setminus\{T,\,0,\,-z\}$.

Now, consider the integral of (4.7). Because the integrand of the integral has no finite singularities, we can deform the path of integration in (4.7), the nonnegative real axis, to $\Gamma_j^-\cup\Gamma_j^+$ in Case 1, or to Γ_j^+ (or Γ_j^-) in either Case 2 or Case 3, i.e.,

$$\frac{(n+\nu)!\,P_{n,\nu}((n+\nu)z)}{(n+\nu)^{n+\nu+1}}=I_j^+(z)+I_j^-(z) \tag{4.23}$$

if Case 1 applies, and

$$\frac{(n+\nu)!\,P_{n,\nu}((n+\nu)z)}{(n+\nu)^{n+\nu+1}}=I_j^+(z)\qquad(\text{or } I_j^-(z)) \tag{4.23′}$$

if either Case 2 or Case 3 applies. Similarly, from (4.8), we have

$$\frac{(n+\nu)!\,e^{(n+\nu)z}\,Q_{n,\nu}((n+\nu)z)}{(n+\nu)^{n+\nu+1}}=I_j^+(z)+I_j^-(z) \tag{4.24}$$

if Case 2 applies, and

$$\frac{(n+\nu)!\,e^{(n+\nu)z}\,Q_{n,\nu}((n+\nu)z)}{(n+\nu)^{n+\nu+1}}=I_j^+(z)\qquad(\text{or } I_j^-(z)) \tag{4.24′}$$

if either Case 1 or Case 3 applies, and from (4.9)

$$\frac{(n+\nu)!\,\{e^{(n+\nu)z}\,Q_{n,\nu}((n+\nu)z)-P_{n,\nu}((n+\nu)z)\}}{(n+\nu)^{n+\nu+1}}=I_j^+(z)+I_j^-(z) \tag{4.25}$$

if Case 3 applies, and

$$\frac{(n+\nu)!\,\{e^{(n+\nu)z}\,Q_{n,\nu}((n+\nu)z)-P_{n,\nu}((n+\nu)z)\}}{(n+\nu)^{n+\nu+1}}=I_j^+(z)\quad(\text{or } I_j^-(z)) \tag{4.25'}$$

if Case 1 or Case 2 applies.

Now, suppose that $\hat{z}$ is a limit point of zeros of $\{P_{n,\nu}((n+\nu)z)\}_{j=1}^{\infty}$ where $\hat{z}\in\mathbb{C}\backslash(\mathscr{R}_\sigma\cup\{0\})$. Thus, there are subsequences $\{n_k\}_{k=1}^{\infty}\subset\{n_j\}_{j=1}^{\infty}$ and $\{z_k\}_{k=1}^{\infty}$ for which

$$\lim_{k\to\infty} z_k=\hat{z},\quad \lim_{k\to\infty} n_k=+\infty,\quad\text{and}\quad P_{n_k,\nu_k}((n_k+\nu_k)z_k)=0\qquad \forall\, k\geqq 1. \tag{4.26}$$

Suppose that $\hat{z}\in\mathbb{C}\backslash(\mathscr{R}_\sigma\cup\{0\})$ is such that either Case 2 or Case 3 applies for an infinite subsequence $\{z_i'\}_{i=1}^{\infty}$ of the sequence $\{z_k\}_{k=1}^{\infty}$. Because the multiplier of $\left\{1+O\left(\frac{1}{n+\nu}\right)\right\}$ in (4.22) does not vanish for all j sufficiently large, then from (4.22) and (4.23′) (with $I_j^+(z)$), we have

$$\frac{(n+\nu)!\,P_{n,\nu}((n+\nu)z)\,e^{-i\theta_j^+}}{(n+\nu)^{n+\nu+1}\exp\{(n+\nu)\tilde{h}_j(\tilde{t}_j^+(z))\}}\left|\frac{(n+\nu)\,\tilde{h}_j^{(2)}(\tilde{t}_j^+(z))}{2\pi}\right|^{1/2}=1+O\left(\frac{1}{n+\nu}\right)$$

as $j\to\infty$, uniformly on any compact subset of $\mathbb{C}\backslash(\mathscr{R}_0\cup\{0\})$. But, evaluating the left side of the above expression in the points z_i' gives zero from (4.26), while the corresponding right side tends, from the uniformity of the estimate, to unity as $i\to\infty$. This contradiction shows that limit points $\hat{z}\in\mathbb{C}\backslash(\mathscr{R}_\sigma\cup\{0\})$ of the zeros of $\{P_{n,\nu}((n+\nu)z)\}_{j=1}^{\infty}$ can *only* occur if $\hat{z}$ is the limit point (cf. (4.26)) of zeros z_k which correspond only to Case 1 for all k sufficiently large. In a similar fashion, the limit points $\hat{z}\in\mathbb{C}\backslash(\mathscr{R}_\sigma\cup\{0\})$ of the zeros of $\{Q_{n,\nu}((n+\nu)z)\}_{j=1}^{\infty}$ and of $\{e^{(n+\nu)z}Q_{n,\nu}((n+\nu)z)-P_{n,\nu}((n+\nu)z)\}_{j=1}^{\infty}$ can occur, respectively, only if $\hat{z}$ is the limit point of z_k which correspond only to Case 2 and to Case 3, for all k sufficiently large.

Continuing, consider any $z\in\mathbb{C}\backslash(\mathscr{R}_\sigma\cup\{0\})$. From the last display in (4.22), we have from (4.13′) and (4.14′) that $I_j^+(z)$ cannot vanish for all j sufficiently large. Thus, consider

$$1+\frac{I_j^-(z)}{I_j^+(z)} \tag{4.27}$$

which is well-defined for any $z\in\mathbb{C}\backslash(\mathscr{R}_\sigma\cup\{0\})$, for all j sufficiently large. Now, it can be verified that $1\pm z+\tilde{g}_j(z)$ does not vanish on $\mathbb{C}\backslash\tilde{\mathscr{R}}_j$, and, as in § 2, we define $(1+z+\tilde{g}_j(z))^{\left(\frac{2n}{n+\nu}\right)}$ and $(1-z+\tilde{g}_j(z))^{\left(\frac{2\nu}{n+\nu}\right)}$, respectively, by requiring their values at $z=0$ to be the positive real numbers $2^{\left(\frac{2n}{n+\nu}\right)}$ and $2^{\left(\frac{2\nu}{n+\nu}\right)}$, and by analytic con-

tinuation on $\mathbb{C}\backslash\tilde{\mathscr{R}}_j$. In analogy with the function $w_\sigma(z)$ of (2.5), we then set

$$\tilde{w}_j(z):=\frac{4\left(\frac{\nu}{n}\right)^{\left(\frac{\nu}{n+\nu}\right)} z\exp(\tilde{g}_j(z))}{\left(1+\frac{\nu}{n}\right)(1+z+\tilde{g}_j(z))^{\left(\frac{2n}{n+\nu}\right)}(1-z+\tilde{g}_j(z))^{\left(\frac{2\nu}{n+\nu}\right)}}, \qquad \forall j\geqq 1, \tag{4.28}$$

which is analytic, single-valued, and nonzero on $\mathbb{C}\backslash(\tilde{\mathscr{R}}_j\cup\{0\})$. With these definitions, it can be verified, using (4.22), that (4.27) can be expressed as

$$1+\frac{I_j^-(z)}{I_j^+(z)}=1-(\tilde{w}_j(z))^{n+\nu}/N_j(z), \tag{4.29}$$

where

$$N_j(z):=-(\tilde{w}_j(z))^{n+\nu}\frac{I_j^+(z)}{I_j^-(z)}=(-1)^{\nu+1}\left(\frac{\tilde{h}_j^{(2)}(\tilde{t}_j^-(z))}{\tilde{h}_j^{(2)}(\tilde{t}_j^+(z))}\right)^{1/2}\left\{1+O\left(\frac{1}{n+\nu}\right)\right\}. \tag{4.30}$$

By definition, N_j is analytic and single-valued in a neighborhood of each z in $\mathbb{C}\backslash(\mathscr{R}_\sigma\cup\{0\})$, for all j sufficiently large. Moreover, with (4.13′) and (4.14), it follows from (4.30) that

$$\lim_{j\to\infty}|N_j(z)|^{1/(n+\nu)}=1, \tag{4.31}$$

uniformly on any compact subset of $\mathbb{C}\backslash(\mathscr{R}_\sigma\cup\{0\})$.

Again, let $\hat{z}$ be a limit point in $\mathbb{C}\backslash(\mathscr{R}_\sigma\cup\{0\})$ of zeros of $\{P_{n,\nu}((n+\nu)z)\}_{j=1}^{\infty}$, so that (4.26) is valid, and Case 1 is valid for z_k for all k sufficiently large. Hence, from (4.23) and (4.29),

$$\frac{(n+\nu)!\,P_{n,\nu}((n+\nu)z)}{(n+\nu)^{n+\nu+1}I_j^+(z)}=1-(\tilde{w}_j(z))^{n+\nu}/N_j(z) \tag{4.32}$$

is valid for the points z_k of (4.26), for all k sufficiently large. Thus, $(\tilde{w}_k(z_k))^{n_k+\nu_k}=N_k(z_k)$, and thus

$$|\tilde{w}_k(z_k)|=|N_k(z_k)|^{1/(n_k+\nu_k)} \qquad \forall\, k \text{ sufficiently large.}$$

But, it follows from the definitions of $\tilde{w}_j$ in (4.28) and w_σ in (2.5) that

$$\lim_{k\to\infty}|\tilde{w}_k(z_k)|=|w_\sigma(\hat{z})|.$$

Thus, from the uniformity of the relation in (4.31),

$$|w_\sigma(\hat{z})|=1, \tag{4.33}$$

whence $\hat{z}\in D_\sigma$ which completes the necessity of (2.7) of Theorem 2.2 for the case $0<\sigma<\infty$. The proof for the case $\sigma=0$ is similar and is omitted.

We remark that, because of identity (1.4), the necessity of (2.8) for the case $0<\sigma<\infty$ of Theorem 2.2 for the limit points $\hat{z}$ of the poles of the normalized Padé approximants also follows from the analysis above, and $\hat{z}\in E_\sigma$. Finally, if $\hat{z}$ is a limit

point of nontrivial zeros of the normalized Padé remainders $\{e^{(n+\nu)z} Q_{n,\nu}((n+\nu)z) - P_{n,\nu}((n+\nu)z)\}_{j=1}^{\infty}$, it is evident from (2.1) of Proposition 2.1 that $|\hat{z}| \geqq 1$. Moreover, $\hat{z}$ must be the limit of z_k which correspond only to Case 3 for all k sufficiently large. Thus, with Case 3 of (4.25) and the analysis above, $|w_\sigma(\hat{z})| = 1$, whence $\hat{z} \in F_\sigma$, completing the necessity of (2.9) of Theorem 2.2.

To complete the proof of Theorem 2.2, we consider the sufficiency of (2.7)–(2.9), and we again assume that $0 < \sigma < \infty$. Consider first the set G_σ of (4.4), where $G_\sigma = D_\sigma \cup E_\sigma$. As previously noted, z_σ^+ and z_σ^- are in G_σ. But, as a consequence of (1.9) of Theorem 1.3, it follows, upon normalization, that $P_{n,\nu}((n+\nu)z)$ has zeros $\omega_j^\pm$ which satisfy

$$\omega_j^\pm = z_\sigma^\pm + o(1), \qquad \text{as } j \to \infty.$$

Thus, both z_σ^+ and z_σ^- are limit points of zeros of $\{P_{n,\nu}((n+\nu)z)\}_{j=1}^{\infty}$.

Next, consider any $\hat{z} \in G_\sigma$ with $\hat{z} \neq z_\sigma^\pm$. From the discussion following (4.4), $\hat{z}$ is then a nonzero interior point of the unit disk, whence $\hat{z} \in \mathbb{C} \setminus (\mathscr{R}_\sigma \cup \{0\})$. Now, choose any sufficiently small closed disk H having $\hat{z}$ as center such that $H \subset \mathbb{C} \setminus (\mathscr{R}_\sigma \cup \{0\})$ and such that H lies interior to the unit disk. From (4.31), $|N_j(z)|^{1/(n+\nu)} \to 1$ uniformly on H as $j \to \infty$. Noting by definition (4.4) that $|w_\sigma(\hat{z})| = 1$, for each j and each $z \in H$ select the $(n+\nu)$-*th* root of $N_j(z)$ with argument closest to $w_\sigma(\hat{z})$. With this choice,

$$(N_j(z))^{1/(n+\nu)} \to w_\sigma(\hat{z}) \qquad \text{as } j \to \infty,$$

uniformly on H. Next, set

$$f(z) := w_\sigma(z) - w_\sigma(\hat{z}). \tag{4.34}$$

Because w_σ is univalent in $|z| \leqq 1$ from Lemma 4.1, f has a unique zero in H at $\hat{z}$, and, moreover, $f(z) \not\equiv 0$. Next, define

$$f_j(z) := \tilde{w}_j(z) - (N_j(z))^{1/(n+\nu)} \qquad \forall j \geqq 1. \tag{4.35}$$

It follows that $\{f_j(z)\}_{j=1}^{\infty}$ converges uniformly to f on H. Hence, by Hurwitz's Theorem (cf. Walsh [17, p. 6]), f_j has precisely as many zeros in H as does f, for all j sufficiently large. But, as f has exactly one zero (at $\hat{z}$) in H, then f_j has precisely one zero, say z_j, in H for all j sufficiently large, and moreover

$$\lim_{j \to \infty} z_j = \hat{z}. \tag{4.36}$$

Now, $f_j(z_j) = 0$ implies from (4.35) and (4.29) that $1 + (I_j^-(z_j)/I_j^+(z_j)) = 0$, or equivalently

$$I_j^-(z_j) + I_j^+(z_j) = 0 \qquad \text{for all } j \text{ suff. large.} \tag{4.37}$$

Now, each point z_j of the sequence $\{z_j\}_{j=1}^{\infty}$ corresponds to one (or more) of Cases 1–3 for the curves $\Gamma_j^\pm$ for $\tilde{h}_j(t)$. Suppose then that $\{z_k'\}_{k=1}^{\infty}$ is an infinite subsequence of $\{z_j\}_{j=1}^{\infty}$ for which each point z_k' corresponds to Case 1. Thus, from (4.23) and (4.37), it follows that

$$P_{n,\nu}((n+\nu)z_k') = 0 \qquad \text{for all } k \geqq 1,$$

whence, from (4.36),

$$\hat{z} \text{ is a limit point of zeros of } \{P_{n,\nu}((n+\nu)z)\}_{j=1}^{\infty}. \tag{4.38}$$

Moreover, in this case, Theorem 1.1 gives us that $\hat{z}$, as the limit point of zeros of $\{P_{n,\nu}((n+\nu)z)\}_{j=1}^{\infty}$, must lie in $\bar{S}_\sigma$, whence $\hat{z}\in D_\sigma$ (cf. (2.7)). Similarly, if Case 2 holds for each point of an infinite subsequence of $\{z_j\}_{j=1}^{\infty}$, then $\hat{z}\in E_\sigma$ (cf. (2.8)). Finally, if Case 3 were valid for each point of an infinite subsequence of $\{z_j\}_{j=1}^{\infty}$, then $\hat{z}$, a nonzero point interior to the unit circle, would be the limit point of zeros of

$$\{e^{(n+\nu)z}Q_{n,\nu}((n+\nu)z)-P_{n,\nu}((n+\nu)z)\}_{j=1}^{\infty}.$$

But this contradicts, by normalization, the result (2.1) of Proposition 2.1. This then establishes the sufficiency of (2.7)–(2.8) of Theorem 2.2.

Finally for $0<\sigma<\infty$, we consider the set F_σ, defined by (cf. (2.9)):

$$F_\sigma := \{z\colon\ |w_\sigma(z)|=1 \text{ and } |z|\geqq 1\}.$$

Using (4.2), it can be shown that $|w_\sigma(re^{i\theta})|$, for any fixed θ, is a strictly increasing function of $r\geqq 0$ on $\mathbb{C}\backslash\mathscr{R}_\sigma$, except for a jump discontinuity on the cuts $\mathscr{R}_\sigma$. Next, w_σ is doubled-valued on the cuts $\mathscr{R}_\sigma$, and moreover, for any $z\in\mathscr{R}_\sigma$, these two values of $w_\sigma(z)$, say $w_\sigma(z)_1$ and $w_\sigma(z)_2$, can be shown from (2.5) to satisfy

$$|w_\sigma(z)_1|\cdot|w_\sigma(z)_2|=1 \qquad \forall\, z\in\mathscr{R}_\sigma. \tag{4.39}$$

From this observation, it follows that, for $\sigma\neq 1$, the set F_σ consists of two branches, emanating from $z_\sigma^{\pm}$, symmetric with respect to the real axis, such that each branch is a curve which lies (except for the points $z_\sigma^{\pm}$) interior to one of the two closed sectors having vertices $z_\sigma^{\pm}$ and bounded by $\mathscr{R}_\sigma$ and the rays

$$\left\{z=r\exp\left(\pm i\cos^{-1}\left(\frac{1-\sigma}{1+\sigma}\right)\right)\colon\ r\geqq 1\right\}$$

shown as the shaded regions below in Figure 4. This can also be noted from Figure 2. For the remaining case $\sigma=1$, the sectors of Figure 4 reduce to the rays comprising $\mathscr{R}_1$, and moreover $|w_1(z)|=1$ for all $z\in\mathscr{R}_1$ (cf. (4.40)).

Again, if $0<\sigma<\infty$ with $\sigma\neq 1$, consider any $\hat{z}\in F_\sigma$ with $\hat{z}\neq z_\sigma^{\pm}$, so that $|\hat{z}|>1$. From (4.1) and (4.2), it follows that $w'_\sigma(z)\neq 0$, so that for a sufficiently small closed disk J in $\mathbb{C}\backslash\mathscr{R}_\sigma$ having center $\hat{z}$, $w_\sigma(z)$ is univalent in J. From (4.31), we have that $\lim_{j\to\infty}|N_j(z)|^{1/(n+\nu)}=1$, uniformly on J, and by simply repeating the previous constructions of (4.34)–(4.35), we have (4.36)–(4.37). Now, each z_j of the sequence $\{z_j\}_{j=1}^{\infty}$ (cf. (4.36)) must again correspond to one (or more) of Cases 1–3 for the curves $\Gamma_j^{\pm}$ for $\tilde{h}_j(t)$. Clearly, if Cases 1 or 2 were valid for an infinite subsequence of $\{z_j\}_{j=1}^{\infty}$, then $|\hat{z}|\leqq 1$ would follow from the previously established (2.7) or (2.8), contradicting the assumption that $|\hat{z}|>1$. Thus, only Case 3 is valid for all j sufficiently large, so that from (4.36) and (4.25), $\hat{z}$ is a limit point of zeros of $\{e^{(n+\nu)z}Q_{n,\nu}((n+\nu)z)-P_{n,\nu}((n+\nu)z)\}_{j=1}^{\infty}$.

We now consider the special case $\sigma=1$, omitted in the previous discussion. In this case, it is convenient to simply redefine the cuts $\mathscr{R}_1$ of (2.3) by, say,

$$\hat{\mathscr{R}}_1 := \{z\colon\ z=i+re^{3\pi i/4} \text{ or } z=-i+re^{-3\pi i/4},\ \forall\, r\geqq 0\},$$

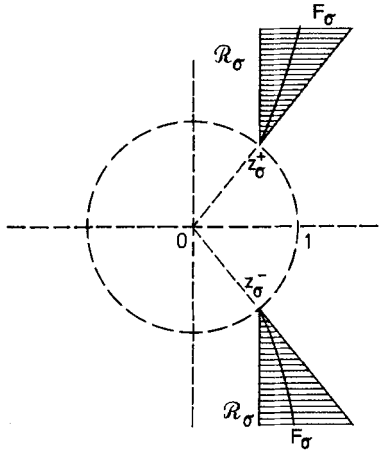

Fig. 4

and to define $g_1(z)=\sqrt{1+z^2}$ with $g_1(0)=1$ and (cf. (2.5))

$$w_1(z)=\frac{z e^{\sqrt{1+z^2}}}{1+\sqrt{1+z^2}} \tag{4.40}$$

on $\mathbb{C}\backslash\hat{\mathcal{R}}_1$ by analytic continuation. Then, (4.2) is valid on $\mathbb{C}\backslash\hat{\mathcal{R}}_1$ and Lemma 4.1 is unchanged, so that $w_1(z)$ is univalent in $|z|<1$, and $|w_1(z)|=1$ for all $z\in\mathcal{R}_1$. Moreover, for any $z=i\tau$ with τ real and $|\tau|>1$, there is a sufficiently small disk $\hat{J}$ with center at z such that $\hat{J}$ is a subset of $\mathbb{C}\backslash\hat{\mathcal{R}}_1$, and w_1 is univalent in $\hat{J}$. The previous arguments can then be applied, giving the desired result (cf. (2.9)) that each point $z=i\tau$ (τ real with $|\tau|>1$), is the limit point of zeros of the normalized remainders $\{e^{(n+\nu)z}Q_{n,\nu}((n+\nu)z)-P_{n,\nu}((n+\nu)z)\}_{j=1}^{\infty}$, which completes the proof of Theorem 2.2. □

In the special case $\sigma=1$ of iii) of Theorem 2.2, we know (cf. (2.9)) that $\mathcal{R}_1=F_1$ is precisely the set of limit point of nontrivial zeros of the normalized Padé remainders $\{e^{(n+\nu)z}Q_{n,\nu}((n+\nu)z)-P_{n,\nu}((n+\nu)z\}_{j=1}^{\infty}$. Complementary to this is the fact from Lemma 3.1 and Proposition 2.1 that *all* the zeros of the normalized Padé remainder $e^{2nz}Q_{n,n}(2nz)-P_{n,n}(2nz)$ lie on $\mathcal{R}_1$, for *any* $n=\nu\geqq 1$.

5. Proof of Theorem 2.3

From the definition of $N_j(z)$ in (4.30), we have that

$$(-1)^{\nu+1}N_j(z)=\left(\frac{\tilde{h}^{(2)}(\tilde{t}_j^-(z))}{\tilde{h}_j^{(2)}(\tilde{t}_j^+(z))}\right)^{1/2}\left\{1+O\left(\frac{1}{n+\nu}\right)\right\},$$

uniformly on any compact subset of $\mathbb{C}\backslash(\mathscr{R}_\sigma \cup \{0\})$, as $j \to \infty$, so that with (4.12) and (4.14),

$$\lim_{j\to\infty} (-1)^{\nu+1} N_j(z) = \left\{\frac{(t_\sigma^+(z)+z)^2 (t_\sigma^+(z))^2}{(t_\sigma^-(z)+z)^2 (t_\sigma^-(z))^2}\right\} \left\{\frac{(t_\sigma^-(z))^2 + \sigma(t_\sigma^-(z)+z)^2}{(t_\sigma^+(z))^2 + \sigma(t_\sigma^+(z)+z)^2}\right\} =: U(z), \tag{5.1}$$

where $U(z)$ is analytic and nonzero (cf. (4.13)) on $\mathbb{C}\backslash(\mathscr{R}_\sigma \cup \{0\})$.

Proof of Theorem 2.3. Although it was not needed in Section 4, it can be verified from the definition of $\tilde{w}_j(z)$ in (4.28) that, in analogy with (4.2),

$$\frac{z\tilde{w}_j'(z)}{\tilde{w}_j(z)} = \tilde{g}_j(z) \qquad \forall\, z \in \mathbb{C}\backslash\tilde{\mathscr{R}}_j, \tag{5.2}$$

and, in analogy with Lemma 4.1, that $\tilde{w}_j(z)$ is univalent in $|z|<1$ for all $j \geqq 1$. Moreover, from (2.5), (2.6), and (4.28), we have that

$$\lim_{j\to\infty} \tilde{w}_j(z) = w_\sigma(z), \tag{5.3}$$

uniformly on any compact subset of $\mathbb{C}\backslash\mathscr{R}_\sigma$. Now, as the proof of Theorem 2.3 turns out to be a suitable modification of Szegö's original argument [14], we merely sketch the argument.

Assuming $0<\sigma<\infty$, it can be verified from (2.2) and (2.5) that

$$w_\sigma(z_\sigma^\pm) = e^{\pm i\sigma\pi/(1+\sigma)}. \tag{5.4}$$

Consider then any two real numbers ϕ_1 and ϕ_2 such that

$$\frac{\sigma\pi}{1+\sigma} < \phi_1 < \phi_2 < 2\pi - \frac{\sigma\pi}{1+\sigma}. \tag{5.5}$$

From the univalence of w_σ in $|z|<1$ from Lemma 4.1, it follows that the inverse image under w_σ of the arc $\{w = e^{i\tau}\colon \phi_1 \leqq \tau \leqq \phi_2\}$ in the w-plane is a subset of D_σ of (2.7), lying wholly in the open unit disk of the z-plane. Next, choose r and R sufficiently close to unity with $0<r<1<R$ so that the inverse image under w_σ of the set in the w-plane,

$$K := \{w\colon\ r \leqq |w| \leqq R \ \text{ and } \ \phi_1 \leqq \arg w \leqq \phi_2\}, \tag{5.6}$$

also lies in the open unit disk of the z-plane, and set $w_\sigma^{-1}(K) =: L$, where $L = L(r, R, \phi_1, \phi_2)$. In the same fashion, the univalence of $\tilde{w}_j$ similarly defines the sets $(\tilde{w}_j)^{-1}(K) = L_j$, with $L_j \to L$ as $j \to \infty$ because of (5.3).

As in Szegö [14], it suffices to establish Theorem 2.3 for any ϕ_1 and ϕ_2 satisfying (5.5) with $\phi_2 - \phi_1 > 0$ arbitrarily small, for then, any closed arc C of the curve D_σ can be broken into sufficiently small pieces to which Theorem 2.3 can be separately applied. More precisely, r and R can be further chosen close to unity and $\phi_2 - \phi_1$ can be chosen sufficiently small so that (cf. (5.1))

$$U(z) = b(1+\delta(z)) \qquad \forall\, z \in L(r, R, \phi_1, \phi_2),$$

where $|b| \neq 0$ and $|\delta(z)| < 1/2$ for all $z \in L$. Next, define

$$\tilde{v}_j(z) := \frac{(\tilde{w}_j(z))^{n+\nu}}{N_j(z)} \quad \text{and} \quad v_j(z) := (-1)^{\nu+1} \frac{(\tilde{w}_j(z))^{n+\nu}}{b} \tag{5.7}$$

on L_j. Then, suitable small changes can be made, as in [14], in the boundaries of L_j, as a function of j, thereby defining $\tilde{L}_j$, so that $\tilde{L}_j \to L$ as $j \to \infty$ and so that $\tilde{v}_j$ and v_j do not take on the value unity on the boundary of $\tilde{L}_j$. Now, an application of Rouché's Theorem (cf. [14], Hilfsatz 2) shows that $\tilde{v}_j$ and v_j take on the value unity the same number of times in the interior of $\tilde{L}_j$, for all j sufficiently large. Next, a simple calculation shows that the change in the argument of $(v_j - 1)$, as the boundary of $\tilde{L}_j$ is traversed in the positive direction, is

$$\Delta_{\tilde{L}_j}(v_j - 1) = (n+\nu)(\phi_2 - \phi_1) + O(1), \qquad \text{as } j \to \infty.$$

Thus, by the Principle of the Argument, the number of points in $\tilde{L}_j$ where v_j takes on the value unity is

$$\frac{(n+\nu)(\phi_2 - Q_1)}{2\pi} + O(1), \qquad \text{as } j \to \infty. \tag{5.8}$$

Next, since $\tilde{L}_j$ contains a subset of $D_\sigma \backslash \{z_\sigma^{\pm}\}$ for all j sufficiently large, it can be verified that the points of $\tilde{L}_j$ must correspond to the descent curves of Case 1 for all j large. Hence, on combining (4.23), (4.29), and (5.7), we have

$$\frac{(n+\nu)!\, P_{n,\nu}((n+\nu)z)}{(n+\nu)^{n+\nu+1} I_j^+(z)} = 1 + \frac{I_j^-(z)}{I_j^+(z)} = 1 - \tilde{v}_j(z).$$

Thus, the number of zeros of $P_{n,\nu}((n+\nu)z)$ in $\tilde{L}_j$ is given by (5.8), from which it follows that the fraction of the number of zeros of $P_{n,\nu}((n+\nu)z)$ in $\tilde{L}_j$ is, with (2.6), given by

$$\frac{(1+\sigma)(\phi_2 - \phi_1)}{2\pi} + O\left(\frac{1}{(n+\nu)}\right), \qquad \text{as } j \to \infty. \tag{5.9}$$

If (5.9) is applied successively for angles θ_1 and θ_2, and angles θ_3 and θ_4, where

$$0 < \theta_1 < \phi_1 < \phi_2 < \theta_2 \quad \text{and} \quad \phi_1 < \theta_3 < \theta_4 < \phi_2$$

with θ_1, θ_3 approaching ϕ_1 (and θ_2, θ_4 approaching ϕ_2), then, as in Szegö [14, p. 60], the desired result of Theorem 2.3 is obtained. The remaining cases of Theorem 2.3 follow similarly. □

Acknowledgments. We particularly want to thank Professor Martin D. Kruskal (Princeton University) for having suggested the use of steepest descent methods for the asymptotic evaluation of the integrals which arise, for example, in (4.7). We thank Professor Henrici, Kruskal, and Olver for their critical comments and helpful suggestions on the manuscript. We also thank A. Ruttan for his calculation which produced the results of Figure 2, and Alexander S. Elder for having brought the papers of G.E. Tsvetkoff (cf. [15, 16]) to our attention.

References

1. Bleistein, N., Handelsman, R.A.: Asymptotic expansion of integrals. New York: Holt, Rinehart, and Winston 1975
2. Dieudonné, J.: Sur les zéros des polynomes-sections de e^x. Bull. Sci. Math. **70**, 333–351 (1935)
3. Edrei, A.: Asymptotic behavior of the zeros of sequences of Padé polynomials. Padé and rational approximations: theory and applications (E.B. Saff, R.S. Varga, eds.), pp. 43–50. New York: Academic Press 1977
4. Edrei, A.: Angular distribution of the zeros of Padé polynomials. To appear
5. Hille, E.: Ordinary differential equations in the complex domain. New York: Wiley 1976
6. Olver, F.W.J.: The asymptotic expansion of Bessel functions of large order. Philos. Trans. Roy. Soc. London Ser. A **247**, 328–368 (1954)
7. Olver, F.W.J.: Asymptotics and special functions. New York: Academic Press 1974
8. Perron, O.: Die Lehre von den Kettenbrüchen, 3rd ed. Stuttgart: Teubner 1957
9. Saff, E.B., Varga, R.S.: On the zeros and poles of Padé approximants to e^z. Numer. Math. **25**, 1–14 (1975)
10. Saff, E.B., Varga, R.S.: On the sharpness of theorems concerning zero-free regions for certain sequences of polynomials. Numer. Math. **26**, 345–354 (1976)
11. Saff, E.B., Varga, R.S.: The behavior of the Padé table for the exponential. Approximation theory, Vol. II (G.G. Lorentz, C.K. Chui, L.L. Schumaker, eds.), pp. 519–531. New York: Academic Press 1976
12. Saff, E.B., Varga, R.S.: On the zeros and poles of Padé approximants to e^z. II. Padé and rational approximations: theory and applications (E.B. Saff, R.S. Varga, eds.), pp. 195–213. New York: Academic Press 1977
13. Sansone, G., Gerretsen, J.: Lectures on the theory of functions of a complex variable. II. Geometric theory. Groningen: Wolters-Noordhoff 1969
14. Szegö, G.: Über eine Eigenschaft der Exponentialreihe. Sitzungsber. Berl. Math. Ges. **23**, 50–64 (1924)
15. Tsvetkoff, G.E.: On roots of Whittaker's functions. C.R. (Doklady) Acad. Sci. URSS (N.S.) **32**, 10–12 (1941)
16. Tsvetkoff, G.E.: Sur les racines complexes des fonctions de Whittaker. C.R. (Dokl.) Acad. Sci. URSS (N.S.) **33**, 290–291 (1941)
17. Walsh, J.L.: Interpolation and approximation by rational functions in the complex domain, Colloquium Publication, Vol. XX. Providence, R.I.: Amer. Math. Soc. 1969
18. Wynn, P.: Zur Theory der mit gewissen speziellen Funktionen verknüpften Padéschen Tafeln. Math. Z. **109**, 66–70 (1969)

Received November 7, 1977